Parallel Grippers

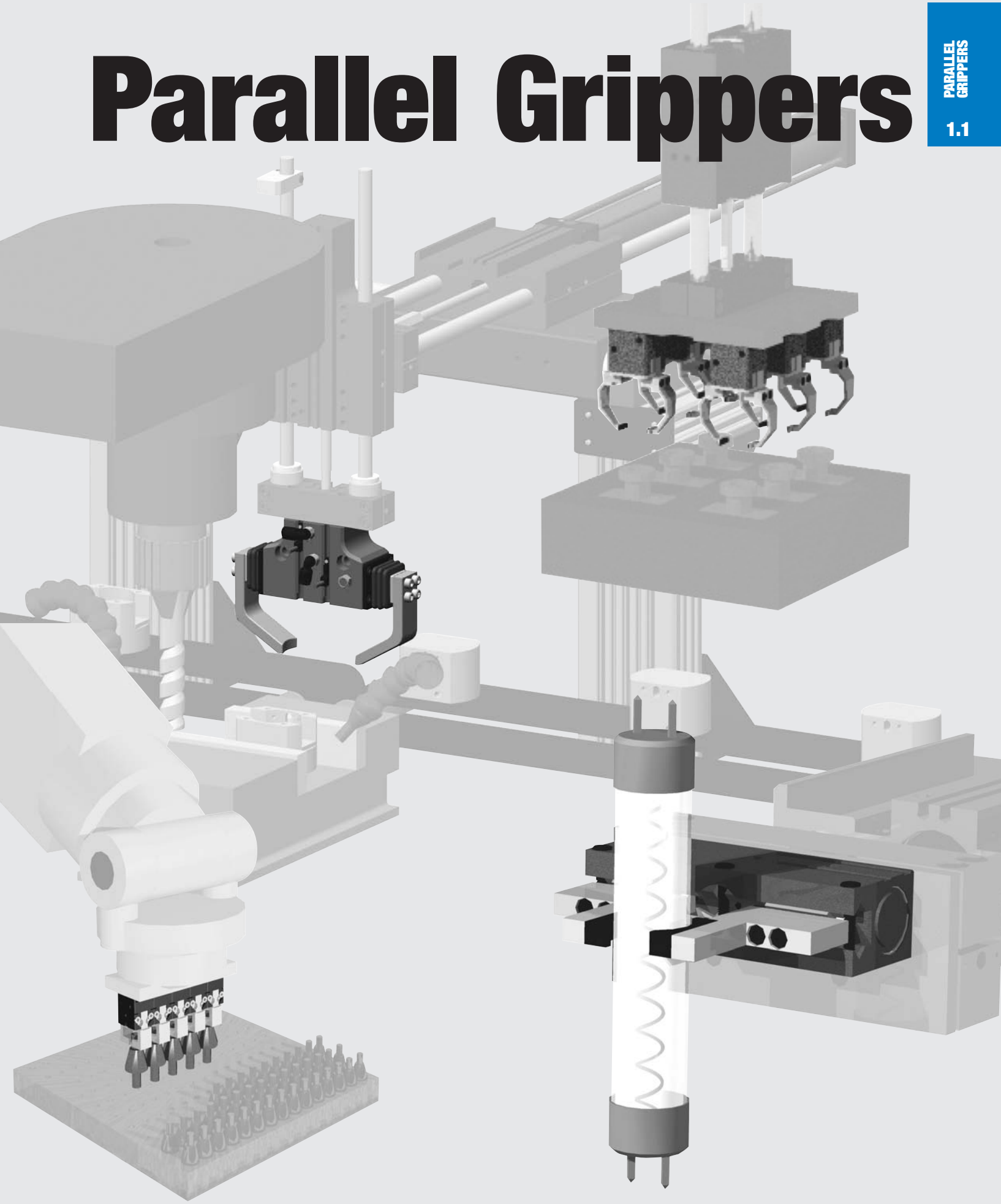

Parallel Motion Gripper

NEW

DPP
DIRECTCONNECT Precision Series

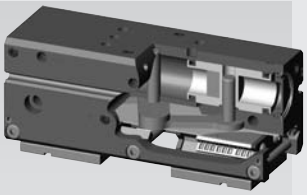

- Precision parallel gripper featuring our DIRECTCONNECT™ mounting pattern
- "Dual-V" precision roller bearing design provides zero side play for excellent part position repeatability
- Low friction design allows for delicate part handling
- Synchronized and non-synchronized versions available
- Optional double acting spring assist for increased force or failsafe operation

See Page 1.6

DPG
DIRECTCONNECT Modular Series

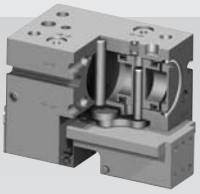

- Multiple DIRECTCONNECT™ mounting locations
- Multiple air port locations
- Spring assisted design for failsafe operation or increased grip force
- Shielded design repels contaminates
- Synchronized and non-synchronized versions

See Page 1.58

RPL
Low Profile Series

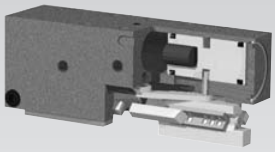

- Lightweight, Compact
- Patented Dual "V" Roller Bearing System
- Excellent accuracy and repeatability
- Synchronized and non-synchronized versions available

See Page 1.26

NEW

DPDS & DPDL
DIRECTCONNECT Modular Series

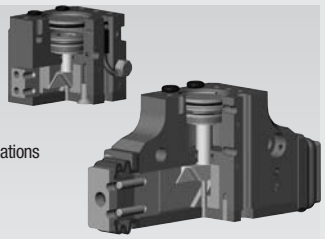

- Multiple DIRECTCONNECT™ mounting locations
- Multiple air port locations
- Multiple strokes per size
- Front-to-back thru-body mounting
- Extended strokes (**DPDL**)
- Purge/scavenge ports for harsh environments
- Optional bottom mount jaws, corrosion resistant hardware, high temperature seals, and sealed jaw boot (**DPDL**)

See Page 1.70

RPLC
Low Profile Clean Room Series

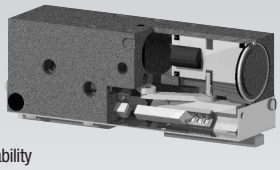

- Designed for use in Class 10 clean rooms as well as in harsh environments
- Stainless Steel hardware and covers for durability
- Vacuum/Pressure port
- Patented Dual "V" Roller Bearing System
- Excellent accuracy and repeatability

See Page 1.34

DPL
DIRECTCONNECT Long Stroke Series

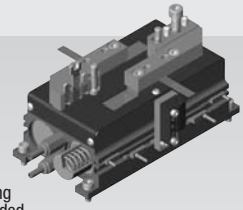

- Designed for use in confined spaces, combining long strokes with the high gripping force provided by two simultaneously acting pistons.
- Offers wide range of options and accessories (safety springs, in-line jaws, magneto resistive or inductive sensors).
- Enclosed, shielded design repels chips and other particulate from internal drive mechanism.

See Page 1.102

RPM
Micro Series

- Extremely small size—as small as 5/8" wide!
- Compact design allows for gripping small parts in small spaces
- Top air manifold eliminates the need for air fittings and allows grippers to be mounted in close array
- Ultra low friction mechanism allows for consistent, repeatable gripping forces

See Page 1.42

RP
Miniature Double Wedge Series

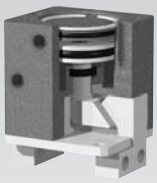

- Compact size, high gripping force, and extended jaw design facilitates finger attachment for smaller parts.
- High grip force to weight ratio make these grippers very popular on small robots.
- Miniature size allows banks of grippers to be mounted in close proximity for multiple part picking and placing.
- Internally sealed for use in hostile environments

See Page 1.114

RPMC
Micro Clean Room Series

- Extremely small size—as low as 5/8" wide!
- Compact design allows for gripping small parts in small spaces
- Top air manifold eliminates the need for air fittings and allows grippers to be mounted in close array
- Ultra low friction mechanism allows for consistent, repeatable gripping forces
- Shielded with purge port

See Page 1.50

RP
Double Wedge Series

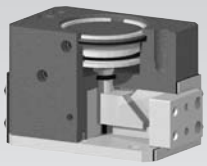

- Patented "Double Wedge Design" for extreme high grip force to size ratio
- Internally sealed for use in hostile environments
- Superior accuracy and repeatability
- Made from 7075-T6 aircraft quality aluminum hardcoat anodized to RC60 with Teflon® impregnation
- Highest grip force to weight/size ratio in the industry

See Page 1.120

Products Overview

RPS
Double Acting Spring Assist Series

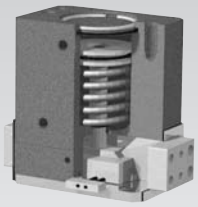

- Spring assisted design for failsafe operation or increased grip force
- Fatigue resistant design for maximum spring life
- Utilizing our patented "Double Wedge Design"
- Superior accuracy and repeatability
- Sealed design on larger units repels chips and other particulate from internal drive mechanism

See Page 1.130

B-Series
Industrial Grippers

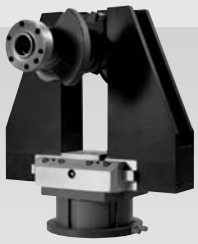

- For large and wide parts in machining and foundry applications
- Heavy duty, rugged designs
- Extremely high grip forces and moment loads

See Page 1.180

GC Series
Precision Parallel Gripper

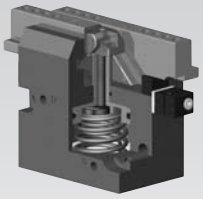

- Precision operation
- Spring assist
- Grippers are fitted with 2 sensor holders (sensor available separately)
- Side or rear airports
- Optional 3rd sensor for part sensing, Viton® seals for high temperature applications, and encoder available

See Page 1.140

RTH/DTH
DIRECTCONNECT Three Jaw Centering Series

- DIRECTCONNECT mounting surface (sizes 1-5)
- Shielded design (DTH) deflects chips and other particulate away from the internal components
- Large surface area of the jaws allows for use of long fingers

See Page 1.182

NEW

DPW
DIRECTCONNECT Wide Body Series

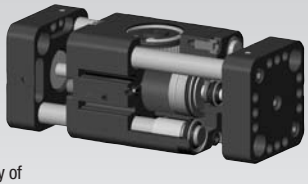

- Features our DIRECTCONNECT™ mounting pattern
- Excellent jaw support through the full body of the gripper
- Highly configurable gripper featuring multiple options and accessories
- Synchronized and non-synchronized versions available
- Each gripper is offered in 2 different strokes

See Page 1.150

PPC Series
Through Hole Gripper

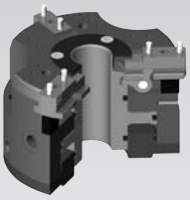

- Unique through hole design
- 3 jaw concentric parallel gripper
- Shielded design protects internal components for increased life in harsh environments
- Optional safety springs, extended strokes, sensors, and high temperature seals

See Page 1.204

RPW
Large Format Wide Body Series

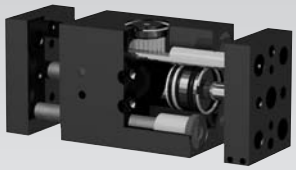

- Excellent jaw support through the full body of the gripper
- High gripping forces utilizing two opposing pistons
- Synchronized and non-synchronized versions available
- Superior accuracy and repeatability
- Sealed design for harsh environments

See Page 1.168

Custom Wheel Gripper
RIM Gripper Series

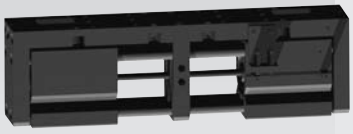

- Wide body, long stroke design
- Designed for maching and foundry applications
- Bolt-in replacement for PHD GRR Series
- Multpile sensing options
- Rigid design and full body support of jaws allows for longer finger lengths

See Page 1.176

Parallel Grippers - DPP DIRECTCONNECT™ Precision Series

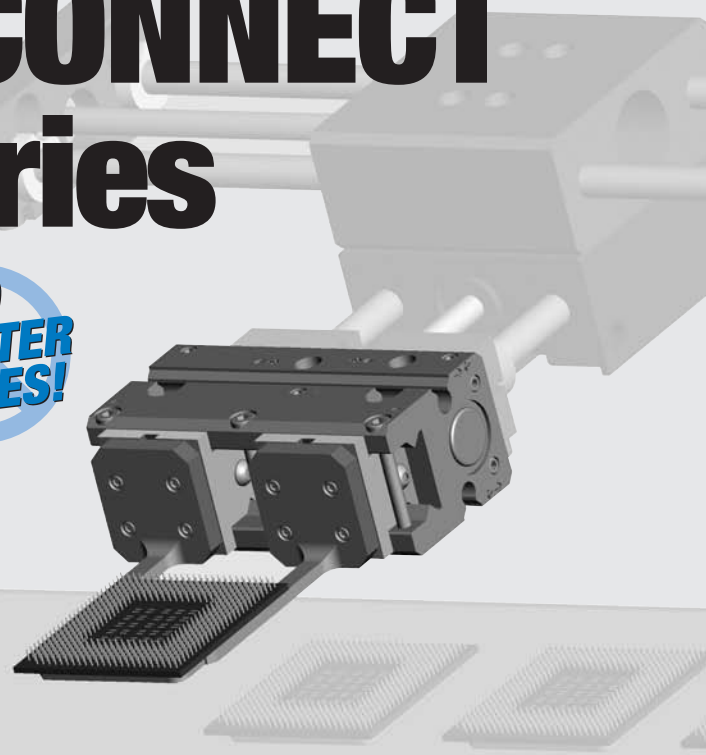

NO ADAPTER PLATES!

- **Multiple Mounting Locations:** All sizes have DIRECTCONNECT top mounting. DIRECTCONNECT thru hole mounting on back side for all sizes except size DPP-28M
- **Multiple Air Port Locations:** Multiple airport locations: tapped air ports on front, top and both sides are standard. Top port is also manifold ready.
- **Sensing options**: Magneto resistive or inductive proximity sensors available. Up to 4 positions can be sensed.
- **Precision applications:** Preloaded "Dual-V" roller bearings eliminate side play for excellent part position repeatability.
- **Longer finger applications:** Rigid design and low friction design allows for longer gripper finger lengths to be used when compared to other grippers of equal weight & size.
- **Delicate part handling**: Low friction mechanism allows for repeatable gripping forces for holding delicate parts. Grip force is easily adjusted by regulating air pressure.
- **Non-synchronous motion:** Non-synchronous option provides independent jaw motion allowing the gripper to pick or place at a point other than its center.
- **Spring return:** Optional double acting spring assist for increased force or fail-safe operation or operate as a single acting to open and to spring closed.

DIRECTCONNECT™
ADVANCED MODULAR AUTOMATION TECHNOLOGY

Mounting Information:

Grippers can be mounted & operated in any orientation

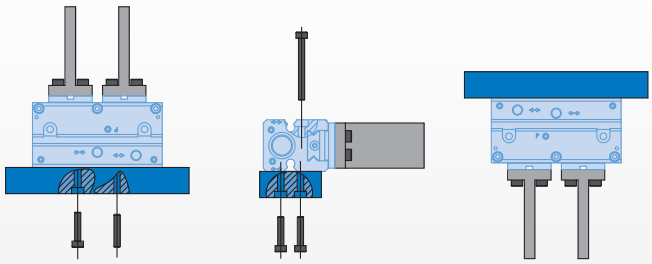

Body mounts with screws and locates with H7 dowel pins for accuracy

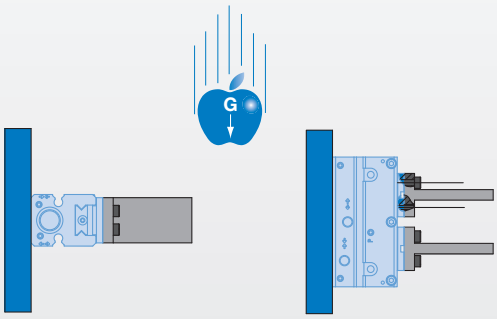

Fingers attach to jaws with screws and locate by key slot and/or H7 dowel pins

Technical Specifications:

Pneumatic Specifications	Imperial	Metric
Pressure Operating Range		
Standard	5-100 psi	0.3-7 bar
-C Spring Closed Option	20-100 psi	1.5-7 bar
Cylinder Type	Double Acting or Single Acting Spring Return or Double Acting Spring Assist	
Dynamic Seals	Internally Lubricated Buna-N	
Valve Required to Operate	4-way, 2-position for Double Acting or 3-way, 2-position for Single Acting	
Air Quality Requirements		
Air Filtration	40 Micron or Better	
Air Lubrication	Not Necessary*	
Air Humidity	Low Moisture Content (dry)	
Temperature Operating Range		
Buna-N Seals (standard)	-30°~180° F	-35°~80° C
Viton® Seals (optional)	-20°~250° F	-30°~120° C
Maintenance Specifications†		
Expected Life		
Normal Application	5 million cycles	
w/Preventative Maintenance	10+ million cycles*	
Field Repairable	Yes	
Seal Repair Kits Available	Yes	

Application Restrictions
- Dirty or gritty environments
- Machine operations generating chips
- Environments with loose particulate
- Applications where mechanism lubricant could cause contamination

*Addition of lubrication will greatly increase service life
†See Maintenance Section

Product Features

Excellent Accuracy
Excellent parallelism and accuracy between gripper mounting surface and jaw surfaces

Standard Purge/ Scavenge Port
Used with a vacuum for clean room environments or positive pressure for harsh environments and jaw surfaces

Shielded Design
Shielded design repels contamination from penetrating the "Dual-V" roller bearings

Accessory Mounting Slots
For Magneto Resistive and Inductive sensors
(Sensors sold separately)

Top Manifold Air Ports
Eliminates the need for airlines

Hard Coat Anodize
One piece, aircraft quality aluminum body, has hard-coat anodize 60 RC with Teflon impregnation

Multiple Air Port Locations
4 standard locations; front, top and both sides

DIRECTCONNECT Mounting Patterns
DIRECTCONNECT™ tapped and dowel mounting surfaces on top and side of body (except DPP-28)

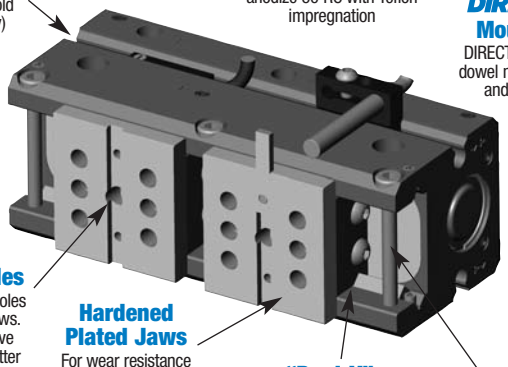

Superior Jaw Support
Jaws are supported using our patented "Dual-V" roller bearing design

Optional Spring Assist
For close stroke

Dowel Holes
H7 dowel pin holes in body and jaws. Jaws also have key slot for better finger alignment

Hardened Plated Jaws
For wear resistance and longer life

Self Lubricating Dynamic Seals
(Buna-N only)

"Dual-V" Roller Bearings
Provide low friction motion and are preloaded for maximum support and zero side play

Adjustable Pre-load Screws
Allows for adjustment of preload on roller bearings

Multiple Sensor Capabilities
Capable of sensing both jaws in the open and closed positions (up to 4 sensors can be used for multi-position sensing)
Sensor magnets on pistons come standard for Magneto Resistive Sensing

Viton Seals
Available for high temperature applications

High Grip Force
With respect to weight due to extremely efficient drive mechanism

Operating Principle

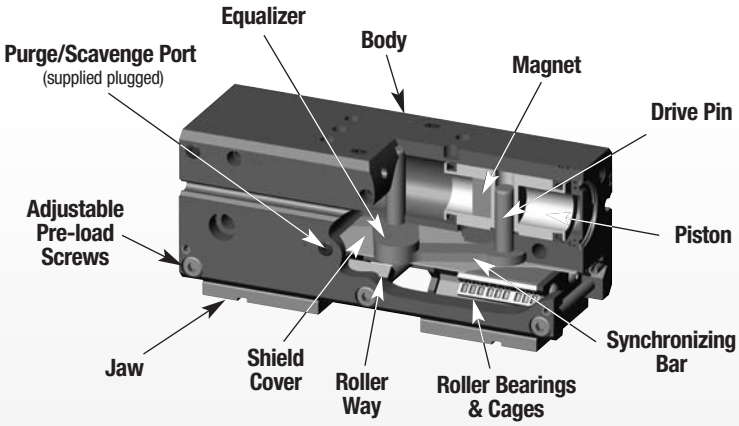

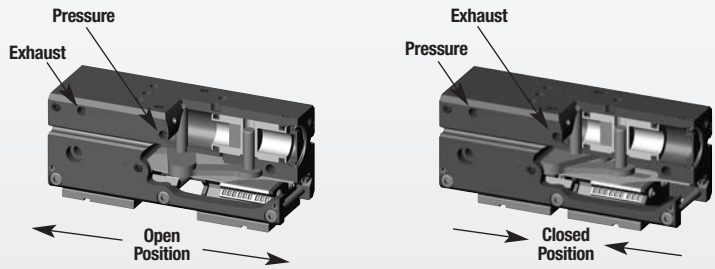

- Dual double acting opposed pistons, connected to both a jaw and a synchronizing bar by a drive pin, actuate in opposite directions.
- The synchronizing bars are connected to the equalizer which synchronizes the motion.
- Suitable for internal of external gripping.
- The synchronizing elements can be removed for non-synchronous operation.

Designed, manufactured and assembled in the USA

Style -DPP Parallel Gripper

Size -10M-06

Style:	10M-06	
Stroke:	0.25 in.	6.4 mm
Grip Force:	25 lbs.	111 N
Weight:	0.35 lbs.	0.16 Kg

See Page 1.8

Size -10M-12

Style:	10M-12	
Stroke:	0.50 in.	12.7 mm
Grip Force:	25 lbs.	111 N
Weight:	0.45 lbs.	0.20 Kg

See Page 1.10

Style -DPP Parallel Gripper

Size -14M-15

Style:	14M-15	
Stroke:	0.63 in.	15.9 mm
Grip Force:	45 lbs.	200 N
Weight:	1.05 lbs.	0.48 Kg

See Page 1.12

Size -14M-25

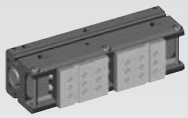

Style:	14M-25	
Stroke:	1.00 in.	25.4 mm
Grip Force:	45 lbs.	200 N
Weight:	1.25 lbs.	0.57 Kg

See Page 1.14

Style -DPP Parallel Gripper

Size -20M-25

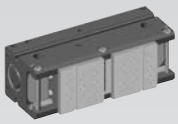

Style:	20M-25	
Stroke:	1.00 in.	25.4 mm
Grip Force:	95 lbs.	423 N
Weight:	2.25 lbs.	1.02 Kg

See Page 1.16

Size -20M-38

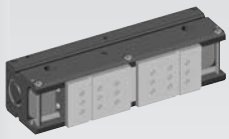

Style:	20M-38	
Stroke:	1.50 in.	38.1 mm
Grip Force:	95 lbs.	423 N
Weight:	3.10 lbs.	1.41 Kg

See Page 1.18

Style -DPP Parallel Gripper

Size -28M-31

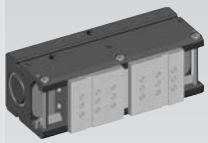

Style:	28M-31	
Stroke:	1.25 in.	31.8 mm
Grip Force:	190 lbs.	845 N
Weight:	4.55 lbs.	2.06 Kg

See Page 1.20

Size -28M-50

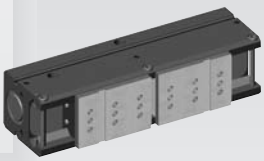

Style:	28M-50	
Stroke:	2.00 in.	50.8 mm
Grip Force:	190 lbs.	845 N
Weight:	6.25 lbs.	2.83 Kg

See Page 1.22

Parallel Grippers - Low Profile Series

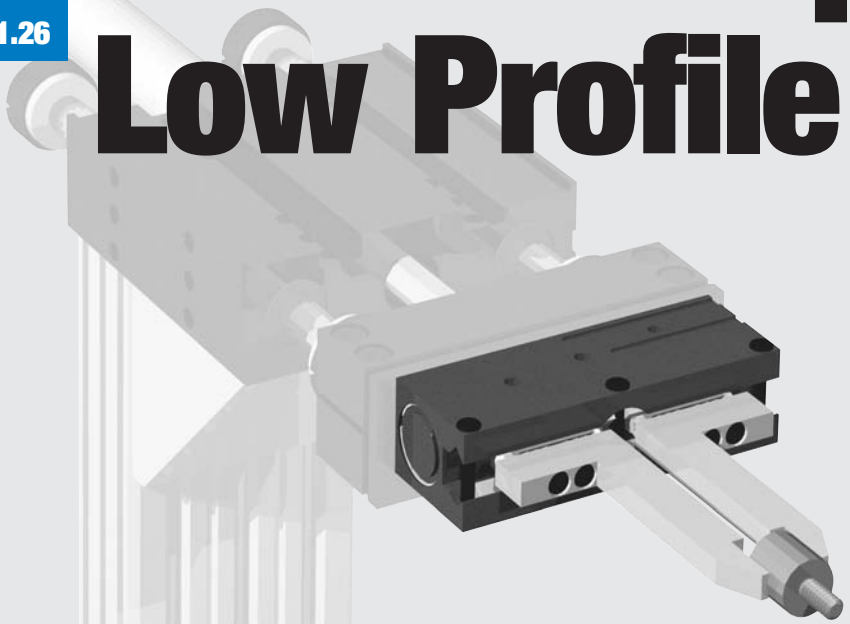

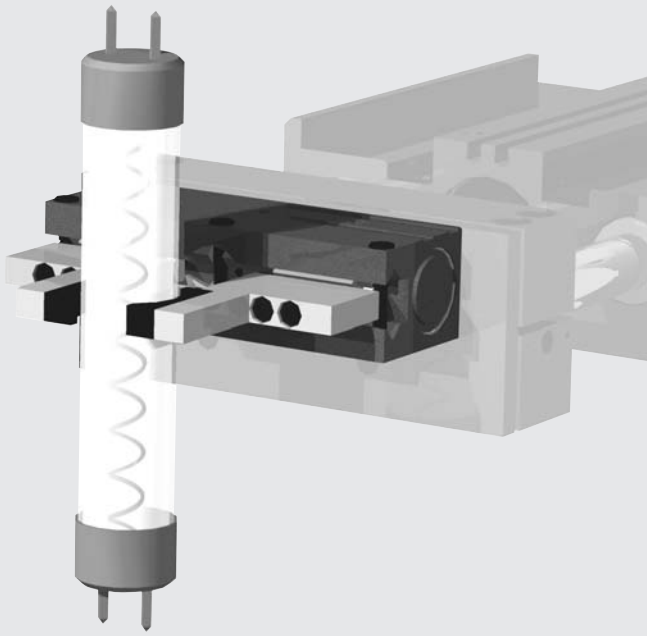

- **Precision applications:** Preloaded "Dual-V" roller bearings eliminate side play for excellent part position repeatability.
- **Repeatable grip force:** Low friction mechanism allows for consistent, repeatable gripping forces. To grip delicate parts, grip force can be easily altered by adjusting air pressure.
- **Longer finger applications:** Rigid design allows for longer gripper finger lengths to be used when compared to other grippers of equal weight & size.
- **Non-synchronous motion:** The unit can be made non-synchronous providing independent jaw motion allowing the gripper to pick or place at a point other than it's center.

Mounting Information:

Grippers can be mounted & operated in any orientation

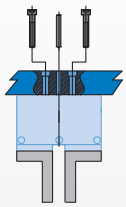

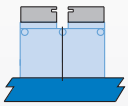

Body mounts with screws and locates with slip fit dowel pins for accuracy

Warning! Protect drive and bearing mechanism from falling debris when mounted upside down

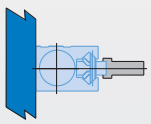

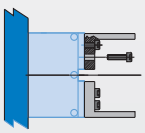

Fingers attach to jaws with screws and locate by keying

Technical Specifications:

Pneumatic Specifications	**Imperial**	**Metric**
Pressure Operating Range	**5-100 psi**	**.3-7 bar**
Cylinder Type	**Dual Double Acting**	
Dynamic Seals	**Internally Lubricated Buna-N**	
Valve Required to Operate	**4-way, 2-position**	

Air Quality Requirements	
Air Filtration	**40 Micron or Better**
Air Lubrication	**Not Necessary***
Air Humidity	**Low Moisture Content (dry)**

Temperature Operating Range		
Buna-N Seals (standard)	**-30°~180° F**	**-35°~80° C**
Viton® Seals (optional)	**-20°~250° F**	**-30°~120° C**

Maintenance Specifications†	
Expected Life	
Normal Application	**5 million cycles**
w/ Preventative Maintenance	**10+ million cycles***
Field Repairable	**Yes**
Seal Repair Kits Available	**Yes**

Application Restrictions
- Dirty or gritty environments
- Machining operations generating chips
- Environments with loose particulate
- Applications where mechanism lubricant could cause contamination

*Addition of lubrication will greatly increase service life
†See Maintenance Section

Product Features

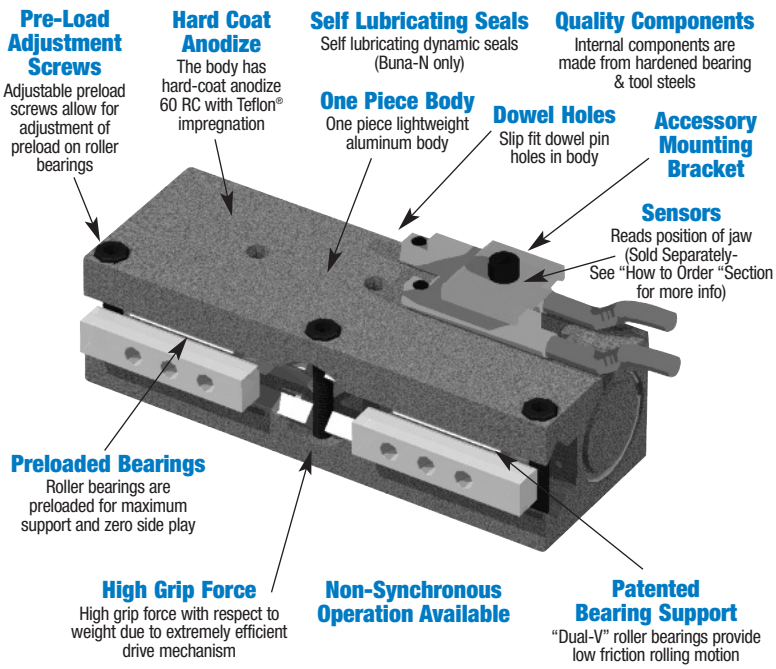

Operating Principle

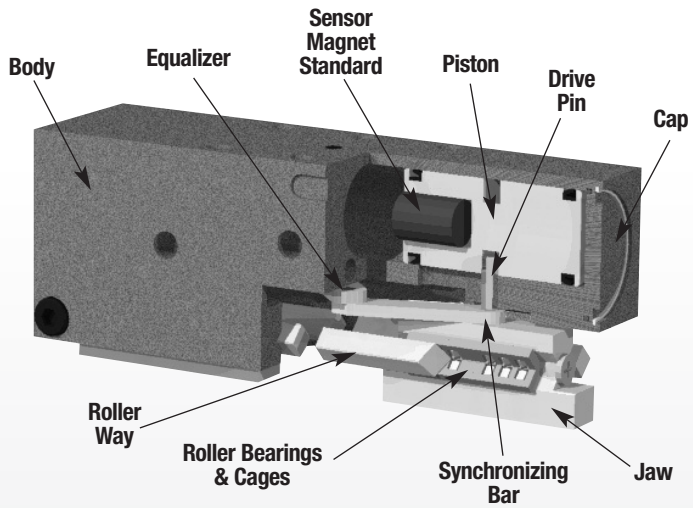

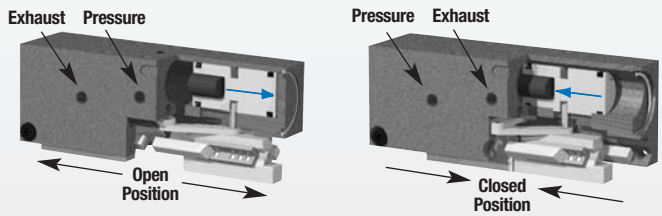

- Dual double acting opposed pistons, connected to both a jaw and a synchronizing bar by a drive pin, actuate in opposite directions.
- The synchronizing bars are connected to the equalizer which synchronizes the motion.
- Suitable for internal or external gripping.
- The synchronizing elements can be removed for non-synchronous operation.

U.S. Patent # 5,529,359
Designed and manufactured in the USA

Style-RPL Parallel Gripper

Size -1M

Style:	RPL-1	RPL-1M
Stroke:	0.25 in.	6.4 mm
Grip Force:	26 lbs.	116 N
Weight:	.16 lbs.	.07 Kg

See Page 1.28

Style-RPL Parallel Gripper

Size -2M

Style:	RPL-2	RPL-2M
Stroke:	0.50 in.	12.7 mm
Grip Force:	26 lbs.	116 N
Weight:	.20 lbs.	.09 Kg

See Page 1.29

Style-RPL Parallel Gripper

Size -3M

Style:	RPL-3	RPL-3M
Stroke:	0.75 in.	19.1 mm
Grip Force:	36 lbs.	160 N
Weight:	.32 lbs.	.14 Kg

See Page 1.30

Style-RPL Parallel Gripper

Size -4M

Style:	RPL-4	RPL-4M
Stroke:	1.00 in.	25.4 mm
Grip Force:	36 lbs.	160 N
Weight:	.38 lbs.	.17 Kg

See Page 1.31

Parallel Grippers

Clean Room / Harsh Environments Series

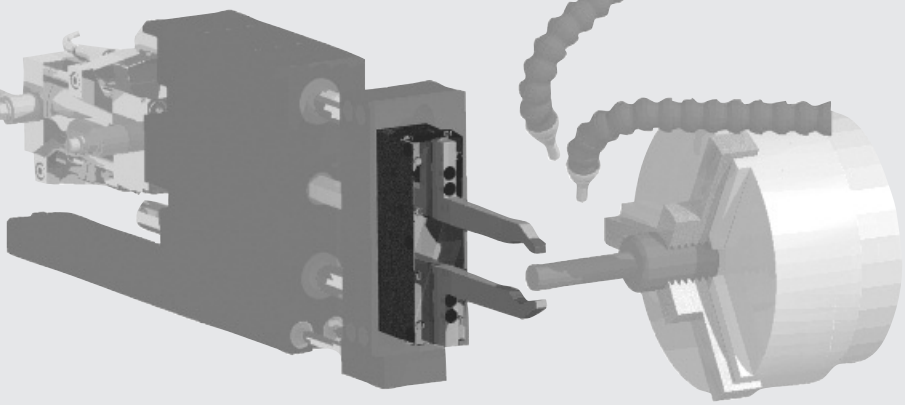

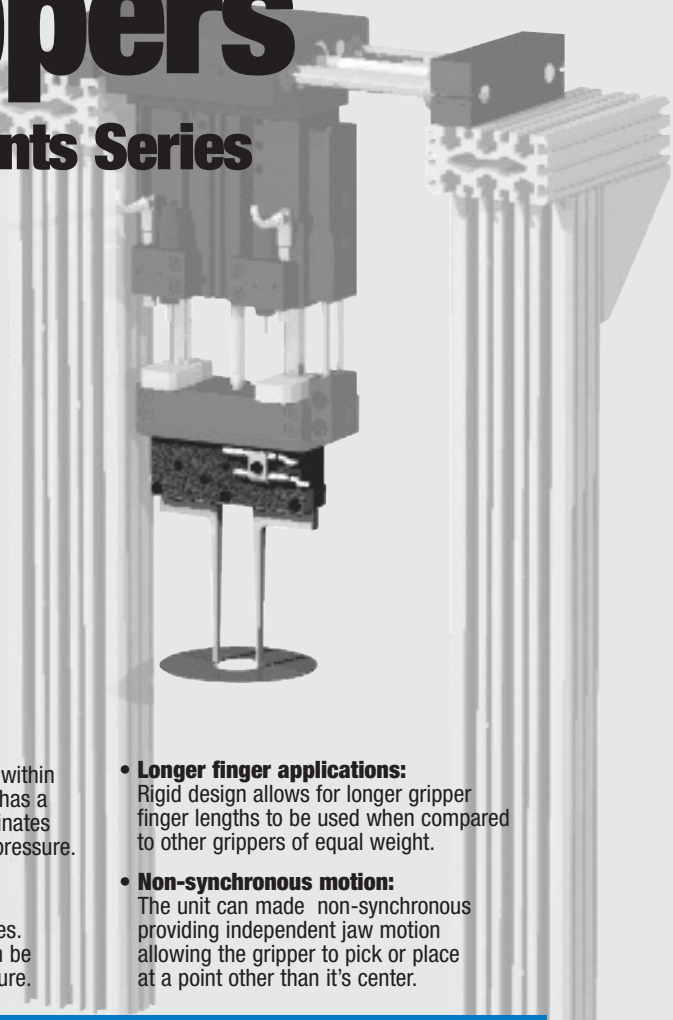

- **Precision applications:**
  Preloaded "Dual-V" roller bearings eliminate side play for excellent part position repeatability.
- **Clean Room rated:**
  A corrosion resistant shield protects the drive and bearing mechanism. All internal components are lubricated with clean room grade lubricant. The scavenge port can be used with vacuum pressure to prevent escape
  of particulate generated by the internal mechanism.
- **Harsh environments:**
  All moving components are located within the stainless steel shield. The body has a purge port which can expel contaminates from the mechanism using low air pressure.
- **Repeatable grip force:**
  Low friction mechanism allows for consistent, repeatable gripping forces. To grip delicate parts, grip force can be easily altered by adjusting air pressure.
- **Longer finger applications:**
  Rigid design allows for longer gripper finger lengths to be used when compared to other grippers of equal weight.
- **Non-synchronous motion:**
  The unit can made non-synchronous providing independent jaw motion allowing the gripper to pick or place at a point other than it's center.

Mounting Information:

Grippers can be mounted & operated in any orientation

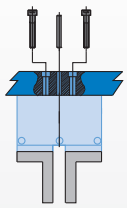

Body mounts with screws and locates with slip fit dowel pins for accuracy

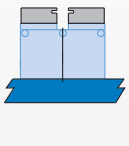

Shields provide protection from falling debris when mounted upside down

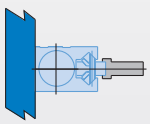

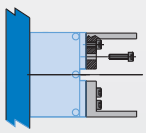

Fingers attach to jaws with screws and locate by keying

Technical Specifications:

Pneumatic Specifications	**Imperial**	**Metric**
Pressure Operating Range	**5-100 psi**	**.3-7 bar**
Cylinder Type	**Dual Double Acting**	
Dynamic Seals	**Internally Lubricated Buna-N**	
Valve Required to Operate	**4-way, 2-position**	

Air Quality Requirements	
Air Filtration	**40 Micron or Better**
Air Lubrication	**Not Necessary***
Air Humidity	**Low Moisture Content (dry)**

Temperature Operating Range		
Buna-N Seals (standard)	**-30°~180° F**	**-35°~80° C**
Viton® Seals (optional)	**-20°~250° F**	**-30°~120° C**

Maintenance Specifications†	
Expected Life	
Normal Application	**5 million cycles**
w/ Preventative Maintenance	**10+ million cycles***
Field Repairable	**Yes**
Seal Repair Kits Available	**Yes**

*Addition of lubrication will greatly increase service life
†See Maintenance Section

Product Features

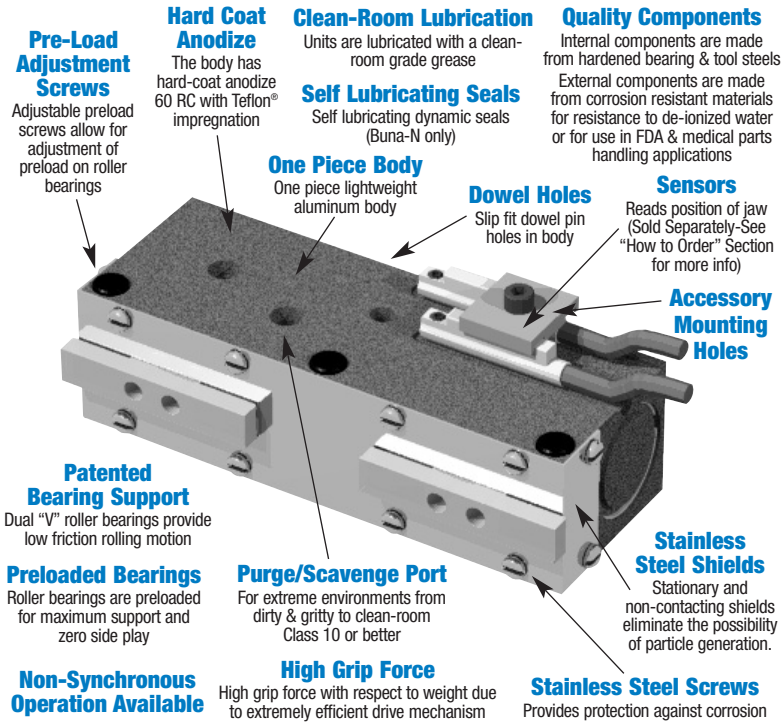

Operating Principle

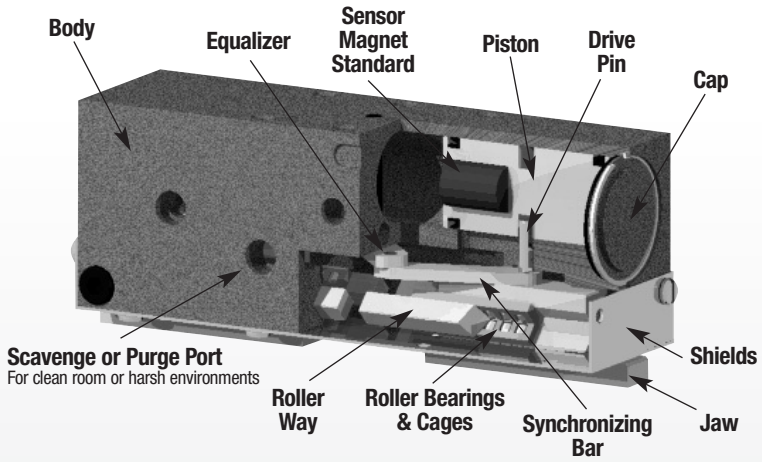

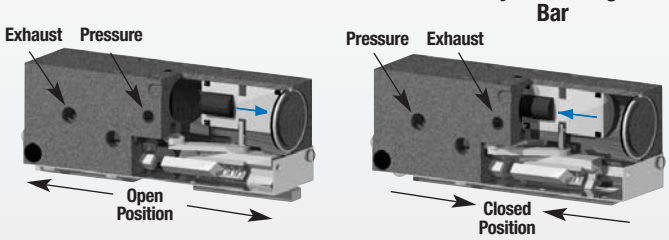

- Dual double acting opposed pistons, connected to both a jaw and a synchronizing bar by a drive pin, actuate in opposite directions.
- The synchronizing bars are connected to the equalizer which synchronizes the motion.
- The purge/scavenge port can be used to expel or retain contaminates using pressure or vacuum respectively.
- Suitable for internal or external gripping.
- The synchronizing elements can be removed for non-synchronous operation.

U.S. Patent # 5,529,359 Designed and manufactured in the USA

Style-RPLC Parallel Gripper

Size -1M

Style:	RPLC-1	RPLC-1M
Stroke:	0.25 in.	6.4 mm
Grip Force:	26 lb	116 N
Weight:	.16 lb	.07 Kg

See Page 1.36

Style-RPLC Parallel Gripper

Size -2M

Style:	RPLC-2	RPLC-2M
Stroke:	0.50 in.	12.7 mm
Grip Force:	26 lb	116 N
Weight:	.20 lb	.09 Kg

See Page 1.37

Style-RPLC Parallel Gripper

Size -3M

Style:	RPLC-3	RPLC-3M
Stroke:	0.75 in.	19.1 mm
Grip Force:	36 lb	160 N
Weight:	.32 lb	.15 Kg

See Page 1.38

Style-RPLC Parallel Gripper

Size -4M

Style:	RPLC-4	RPLC-4M
Stroke:	1.00 in.	25.4 mm
Grip Force:	36 lb	160 N
Weight:	.38 lb	.17 Kg

See Page 1.39

Parallel Grippers - Miniature Series

- **Precision applications:** Preloaded dual-"V" roller bearings eliminate side play for excellent part position repeatability.
- **Miniature size:** Compact design allows for gripping small parts in small spaces.
- **Top manifold:** Grippers can be manifolded through the top mounting surface. This eliminates the need for air fittings and allows grippers to be mounted in close array.
- **Repeatable grip force:** Low friction mechanism allows for consistent, repeatable gripping forces. To grip delicate parts, grip force can be easily altered by adjusting air pressure.

Mounting Information:

Grippers can be mounted & operated in any orientation

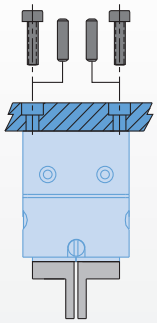

Body mounts with screws and locates with slip fit dowel pins for accuracy

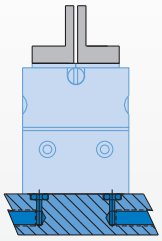

Unit has top manifold ports

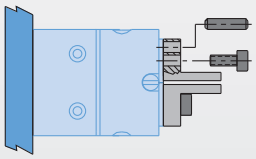

Fingers attach to jaws with screws and locate with dowel pins or by keying

Technical Specifications:

Pneumatic Specifications	**Imperial**	**Metric**
Pressure Operating Range	**40-100 psi**	**1.3-7 bar**
Cylinder Type	**Double Acting**	
Dynamic Seals	**Internally Lubricated Buna-N**	
Valve Required to Operate	**4-way, 2-position**	

Air Quality Requirements	
Air Filtration	**40 Micron or Better**
Air Lubrication	**Not Necessary***
Air Humidity	**Low Moisture Content (dry)**

Temperature Operating Range		
Buna-N Seals (standard)	**-30°~180° F**	**-35°~80° C**
Viton® Seals (optional)	**-20°~250° F**	**-30°~120° C**

Maintenance Specifications†	
Expected Life	
Normal Application	**5 million cycles**
w/ Preventative Maintenance	**10+ million cycles***
Field Repairable	**Yes**
Seal Repair Kits Available	**Yes**

Application restrictions
Dirty or gritty environments
Machining operations generating chips
Environments with loose particulate
Applications where mechanism lubricant could cause contamination

*Addition of lubrication will greatly increase service life
†See Maintenance Section

Product Features

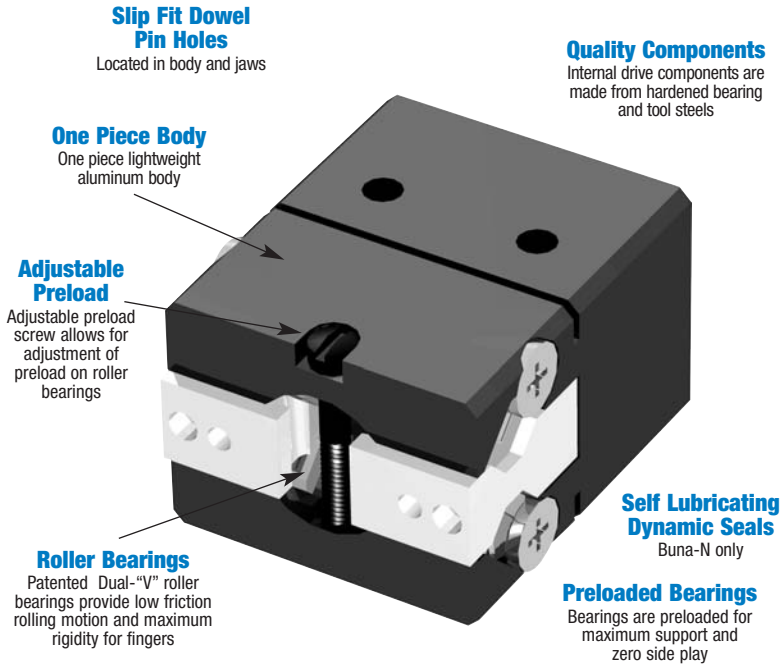

Operating Principle

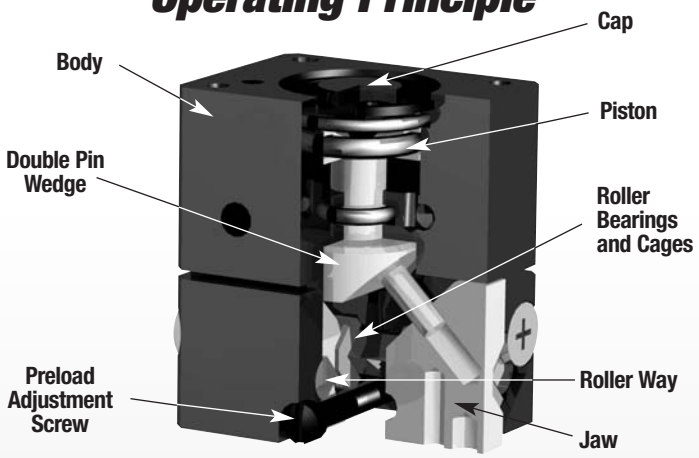

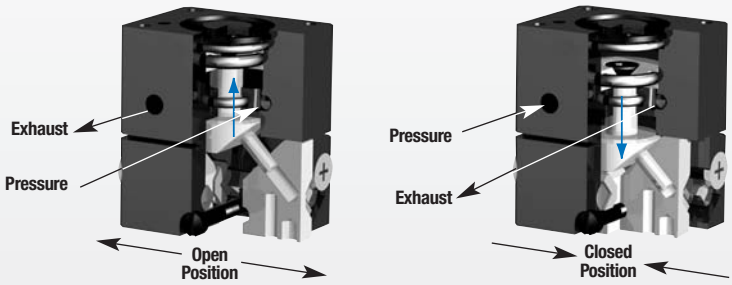

- A double acting piston is connected by a shaft to a double sided pin wedge.
- The pin wedge slides in a hole located in each of the jaws converting vertical motion of the wedge into horizontal synchronous motion of the jaws.
- This gripper is suitable for internal or external gripping.

U.S. Patent #5,529,359 & #5,125,708
Designed and manufactured in the USA

Style-RPM Parallel Gripper

Size -1M

Style:	**RPM-1M**	
Stroke:	0.13 in.	3.2 mm
Grip Force:	8 lbs.	36 N
Weight:	0.052 lbs.	.02 Kg

See Page **1.44**

Style-RPM Parallel Gripper

Size -2M

Style:	**RPM-2M**	
Stroke:	0.19 in.	4.8 mm
Grip Force:	8 lbs.	36 N
Weight:	0.058 lbs.	.03 Kg

See Page **1.45**

Style-RPM Parallel Gripper

Size -3M

Style:	**RPM-3M**	
Stroke:	0.25 in.	6.3 mm
Grip Force:	8 lbs.	36 N
Weight:	0.074 lbs.	.03 Kg

See Page **1.46**

Parallel Grippers - Miniature Clean Room Series

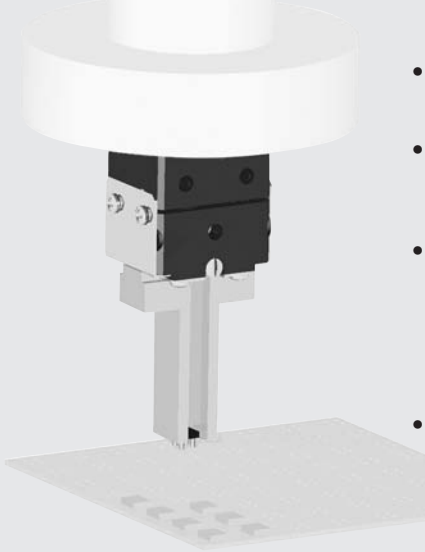

- **Precision applications:**
  Preloaded dual-"V" roller bearings eliminate side play for excellent part position repeatability.
- **Miniature size:**
  Compact design allows for gripping small parts in small spaces.
- **Top manifold:**
  Grippers can be manifolded through the top mounting surface. This eliminates the need for air fittings and allows grippers to be mounted in close array.
- **Clean room rated:**
  A corrosion resistant shield protects the drive and bearing mechanism. All internal components are lubricated with clean room grade grease. The scavenge port can be used with vacuum pressure to prevent escape of particulate generated by the internal mechanism.
- **Harsh environments:**
  All moving components are located within the corrosion resistant cover. The body has a purge port which can expel contaminates from the mechanism using low pressure compressed air.

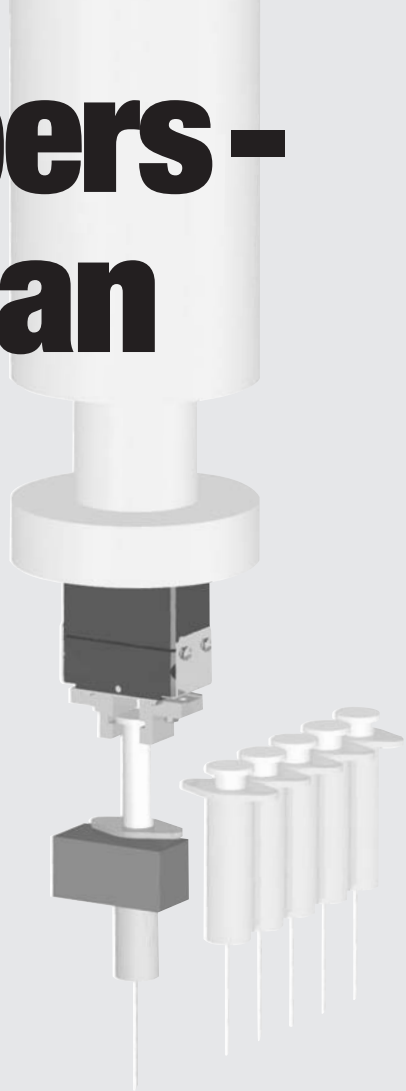

Mounting Information:

Grippers can be mounted & operated in any orientation

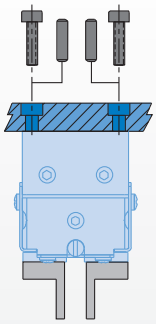

Body mounts with screws and locates with slip fit dowel pins for accuracy

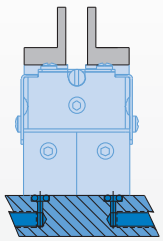

Unit has top manifold ports

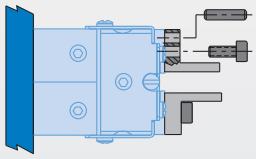

Fingers attach to jaws with screws and locate with dowel pins or by keying

Technical Specifications:

Pneumatic Specifications	**Imperial**	**Metric**
Pressure Operating Range	**40-100 psi**	**3-7 bar**
Cylinder Type	**Double Acting**	
Dynamic Seals	**Internally Lubricated Buna-N**	
Valve Required to Operate	**4-way, 2-position**	

Air Quality Requirements	
Air Filtration	**40 Micron or Better**
Air Lubrication	**Not Necessary***
Air Humidity	**Low Moisture Content (dry)**

Temperature Operating Range		
Buna-N Seals (standard)	**-30°~180° F**	**-35°~80° C**
Viton® Seals (optional)	**-20°~250° F**	**-30°~120° C**

Maintenance Specifications†	
Expected Life	
Normal Application	**5 million cycles**
w/ Preventative Maintenance	**10+ million cycles***
Field Repairable	**Yes**
Seal Repair Kits Available	**Yes**

*Addition of lubrication will greatly increase service life
†See Maintenance Section

Product Features

Preload Bearings
Bearings are preloaded for maximum support and zero side play

Hard Coat Anodize
The body has hard-coat anodize 60 RC with Teflon® impregnation

Quality Components
External components are made from corrosion resistant materials for resistance to de-ionized water or for use in FDA & medical parts handling applications

Clean Room Contaminants
Units are lubricated with a clean-room grade grease

Slip Fit Dowel Pin Holes
Located in body and jaws

Purge/Scavenge Port
Purge/Scavenge port for extreme environments from dirty & gritty to clean-room Class 10 or better

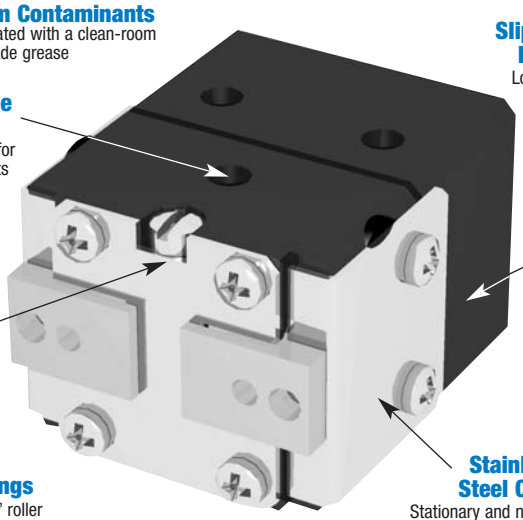

One Piece Body
One piece lightweight aluminum body

Adjustable Preload Screw
Adjustable preload screw allows for adjustment of preload on roller bearings

Roller Bearings
Patented Dual-"V" roller bearings provide low friction rolling motion and maximum rigidity for fingers

Stainless Steel Cover
Stationary and non-contacting cover eliminates the possibility of particle generation

Operating Principle

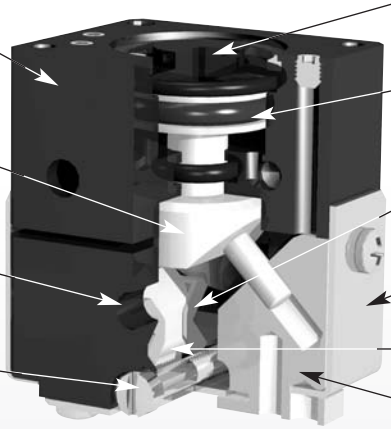

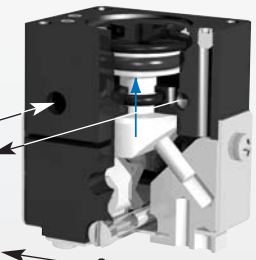

Open Position

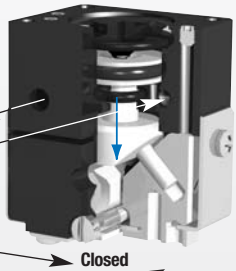

Closed Position

- A double acting piston is connected by a shaft to a double sided pin wedge.
- The pin wedge slides in a hole located in each of the jaws converting vertical motion of the wedge into horizontal synchronous motion of the jaws.
- This gripper is suitable for internal or external gripping.

U.S. Patent #5,529,359 & #5,125,708
Designed and manufactured in the USA

Style-RPMC Parallel Gripper

Size -1M

Style:	**RPMC-1M**	
Stroke:	0.13 in.	3.2 mm
Grip Force:	8 lb	36 N
Weight:	0.052 lb	.02 Kg

See Page **1.52**

Style-RPMC Parallel Gripper

Size -2M

Style:	**RPMC-2M**	
Stroke:	0.19 in.	4.8 mm
Grip Force:	8 lb	36 N
Weight:	0.058 lb	.03 Kg

See Page **1.53**

Style-RPMC Parallel Gripper

Size -3M

Style:	**RPMC-3M**	
Stroke:	0.25 in.	6.3 mm
Grip Force:	8 lb	36 N
Weight:	0.074 lb	.03 Kg

See Page **1.54**

Parallel Grippers - DPG DIRECTCONNECT™ Modular Series

DIRECTCONNECT™
ADVANCED MODULAR AUTOMATION TECHNOLOGY

NO ADAPTER PLATES!

NO ADAPTER PLATES!

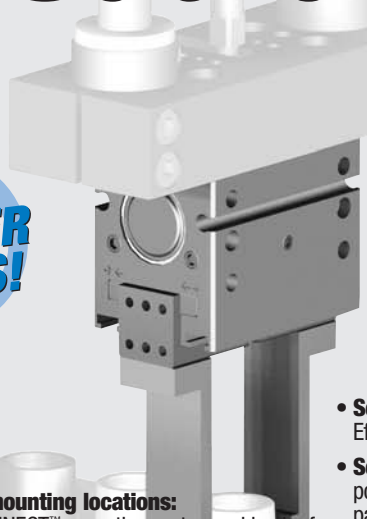

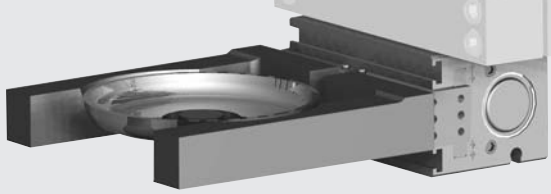

- **Multiple mounting locations:** DIRECTCONNECT™ mounting on top and back of body. Fingers mount to sides or bottom of jaws.
- **Multiple air port positions:** Tapped air ports on front and both sides are standard. Top air ports with counterbores for o-ring manifolded operation and threads for screw-in type fittings are available.
- **Sensing options:** Magneto resistive (Hall Effect) or inductive proximity sensors available.
- **Sense up to four positions:** Up to four jaw positions can be sensed to allow open, closed, part present, or variable part size sensing.
- **Shielded to repel contaminate:** Design repels chips and particulate. Closed jaw position spacing eliminates "chip compactor" effect.
- **Longer finger applications:** Rigid design and full body support of jaw allows for longer finger lengths.
- **Spring assist, spring return:** Cylinders can be double acting, double acting spring assist, failsafe, or single acting in either open or closed direction.
- **Non-synchronous motion:** Non-synchronous motion option provides independent jaw motion allowing the gripper to pick or place at a point other than it's center.
- **Single jaw motion with fixed jaw:** This option locks one jaw in a fixed position while the other jaw is free to move.

Mounting Information:

Grippers can be mounted & operated in any orientation

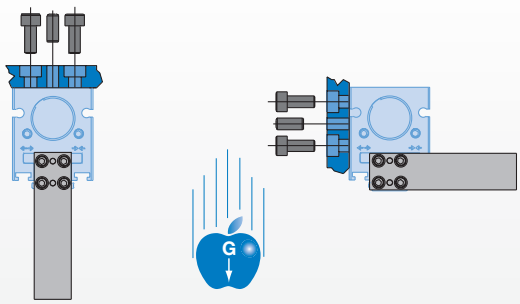

Body mounts with screws and locates with slip fit dowel pins for accuracy

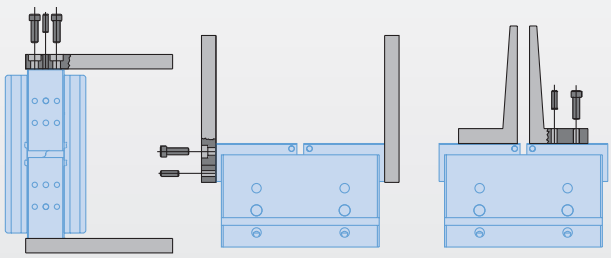

Fingers attach with screws and locate on jaws by keying or dowel pin holes

Technical Specifications:

Pneumatic Specifications	**Imperial**	**Metric**
Pressure Operating Range	**40-100 psi**	**3-7 bar**
Cylinder Type	**Double Acting or Single Acting Spring Return or Double Acting Spring Assist**	
Dynamic Seals	**Internally Lubricated Buna-N**	
Valve Required to Operate	**4-way, 2-position for Double Acting *or* 3-way, 2-position for Single Acting**	

Air Quality Requirements	
Air Filtration	**40 Micron or Better**
Air Lubrication	**Not Necessary***
Air Humidity	**Low Moisture Content (dry)**

Temperature Operating Range		
Buna-N Seals (standard)	**-30°~180° F**	**-35°~80° C**
Viton® Seals (optional)	**-20°~300° F**	**-30°~150° C**

Maintenance Specifications†	
Expected Life	
Normal Application	**5 million cycles**
w/ Preventative Maintenance	**10+ million cycles***
Field Repairable	**Yes**
Seal Repair Kits Available	**Yes**

Application Restrictions
Applications where mechanism lubricant could cause contamination

*Addition of lubrication will greatly increase service life
†See Maintenance Section

DIRECTCONNECT™

Product Features

Hard Coat Anodize
The body and jaws have hard-coat anodize 60RC with Teflon® impregnation

High Temperature
Optional Viton® seals are available for high temperature applications

Multiple Air Port Locations
3 standard airport locations (front & both sides)
Optional top airports available

Sensor Mounting Slots
Standard mounting slots for magneto resistive and inductive sensors (sensors sold separately)

One Piece Body
One piece lightweight aircraft quality aluminum body

DIRECTCONNECT™ Mounting Patterns
2 DIRECTCONNECT™ mounting surfaces on top and back of body

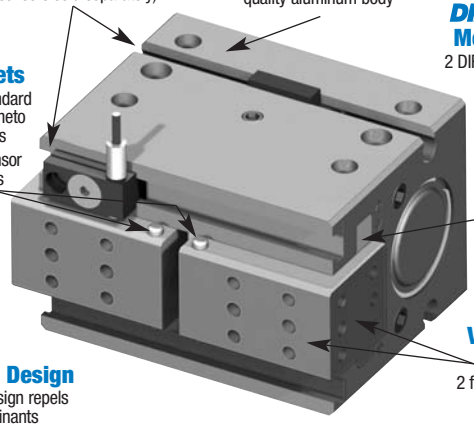

Sensor Targets
Magnets come standard in pistons for magneto resistive sensors
Four inductive sensor targets on sides of jaws

Superior Jaw Support
Jaws are supported throughout the length of the body

Dowel Holes
Slip fit dowel pin holes in body and jaws

Versatile Finger Mounting
2 finger mounting surfaces on each jaw

Shielded Design
Shielded design repels contaminants

Extremely Compact & Robust Design

Multiple Sensor Capabilities
Capable of sensing both jaws in the open and closed positions (up to 4 sensors can be used for multi-position sensing)

Optional Features
- Top air ports eliminating the need for airlines
- Fixed jaw configurations
- Spring assist for open or close stroke
- Non-synchronous version

Self-Lubricating Seals
Self lubricating dynamic seals (Buna-N only)

Operating Principle

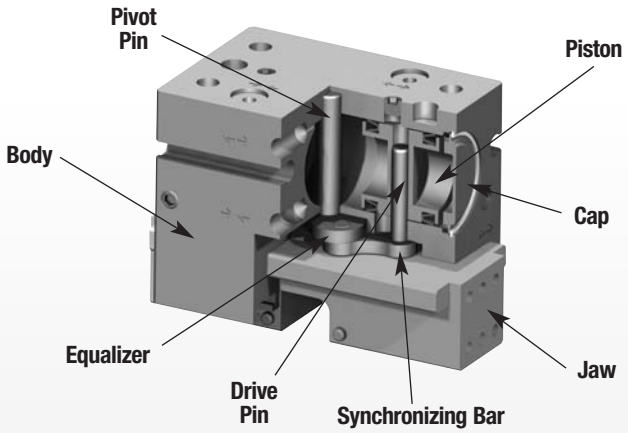

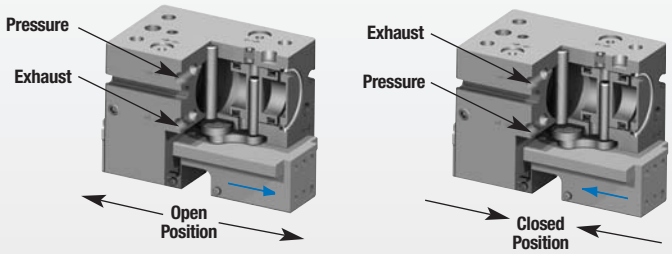

- Dual double acting opposed pistons, connected to both a jaw and a synchronizing bar by a drive pin, actuate in opposite directions.
- The synchronizing bars are connected to the equalizer which synchronizes the motion.
- Suitable for internal or external gripping.
- The synchronizing elements can be removed for non-synchronous operation.

Designed and manufactured in the USA

Style -DPG-10M Parallel Gripper

Size -1

Style:	DPG-10M-1	
Stroke:	0.25 in.	6.4 mm
Grip Force:	50 lbs.	222 N
Weight:	0.39 lbs.	0.17 Kg

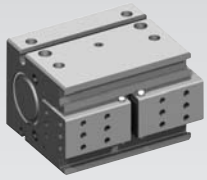

See Page 1.60

Style -DPG-10M Parallel Gripper

Size -2

Style:	DPG-10M-2	
Stroke:	0.50 in.	12.7 mm
Grip Force:	50 lbs.	222 N
Weight:	0.53 lbs.	0.24 Kg

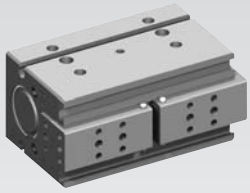

See Page 1.62

Style -DPG-10M Parallel Gripper

Size -3

Style:	DPG-10M-3	
Stroke:	0.75 in.	19.1 mm
Grip Force:	50 lbs.	222 N
Weight:	0.68 lbs.	0.30 Kg

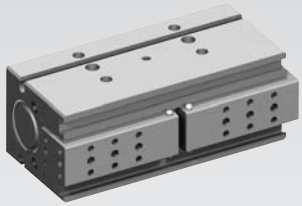

See Page 1.64

Style -DPG-10M Parallel Gripper

Size -4

Style:	DPG-10M-4	
Stroke:	1.00 in.	25.4 mm
Grip Force:	50 lbs.	222 N
Weight:	0.81 lbs.	0.36 Kg

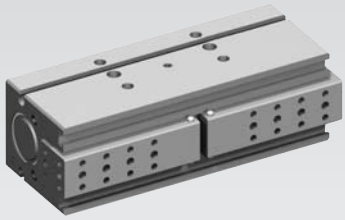

See Page 1.66

Parallel Grippers - DPDS DIRECTCONNECT™ Modular Series

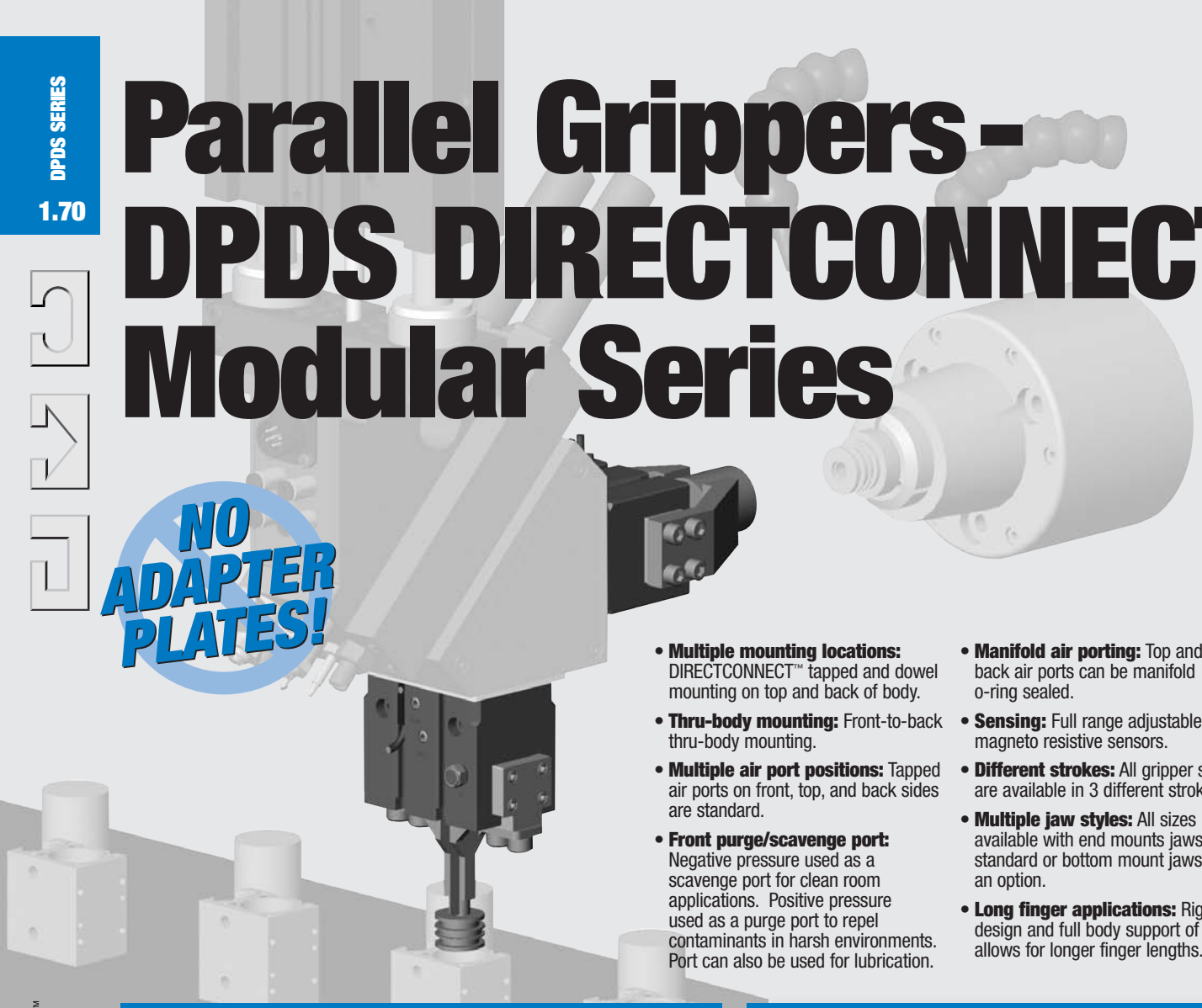

NO ADAPTER PLATES!

- **Multiple mounting locations:** DIRECTCONNECT™ tapped and dowel mounting on top and back of body.
- **Thru-body mounting:** Front-to-back thru-body mounting.
- **Multiple air port positions:** Tapped air ports on front, top, and back sides are standard.
- **Front purge/scavenge port:** Negative pressure used as a scavenge port for clean room applications. Positive pressure used as a purge port to repel contaminants in harsh environments. Port can also be used for lubrication.
- **Manifold air porting:** Top and back air ports can be manifold o-ring sealed.
- **Sensing:** Full range adjustable magneto resistive sensors.
- **Different strokes:** All gripper sizes are available in 3 different strokes.
- **Multiple jaw styles:** All sizes available with end mounts jaws as standard or bottom mount jaws as an option.
- **Long finger applications:** Rigid design and full body support of jaws allows for longer finger lengths.

Mounting Information:

Grippers can be mounted & operated in any orientation

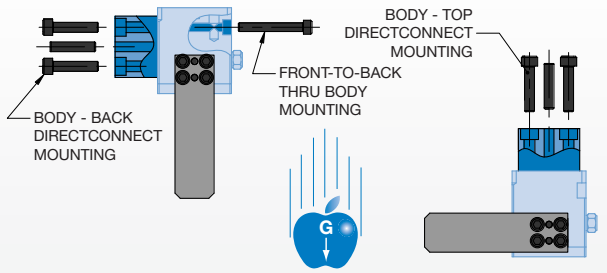

Body mounts with screws and locates with slip fit dowel pins for accuracy

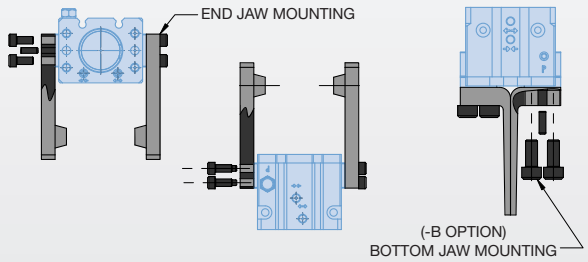

Fingers attach with screws and locate on jaws by keying and/or dowel pins. Fingers can be mounted in any orientation with respect to the jaw.

Technical Specifications:

Pneumatic Specifications	**Imperial**	**Metric**
Pressure Operating Range	**20-100 psi**	**1.5-7 bar**
Cylinder Type	**Double Acting**	
Dynamic Seals	**Internally Lubricated Buna-N**	
Valve Required to Operate	**4-way, 2-position**	
Air Quality Requirements		
Air Filtration	**40 Micron or Better**	
Air Lubrication	**Not Necessary***	
Air Humidity	**Low Moisture Content (dry)**	
Temperature Operating Range		
Buna-N Seals (standard)	**-30°~180° F**	**-35°~80° C**
Viton® Seals (optional)	**-20°~300° F**	**-30°~150° C**
Maintenance Specifications†		
Expected Life		
Normal Application	**5 million cycles**	
w/ Preventative Maintenance	**10+ million cycles***	
Field Repairable	**Yes**	
Seal Repair Kits Available	**Yes**	

Application Restrictions
Applications where mechanism lubricant could cause contamination (use DPDL gripper with **-E** sealed jaw option)

*Addition of lubrication will greatly increase service life
†See Maintenance Section

Product Features

Hard Coat Anodize
The body and bottom plate have hard-coat anodize 60RC with Teflon® impregnation

High Temperature
Optional Viton® seals are available for high temperature applications

Multiple Air Port Locations
3 standard airport locations (front, back, & top)

Sensor Mounting Slots
Standard mounting slots for magneto resistive (sensors sold separately)

One Piece Body
One piece lightweight aircraft quality aluminum body

Manifold Air Ports
Back & top air ports can be O-ring manifold sealed to eliminate air lines

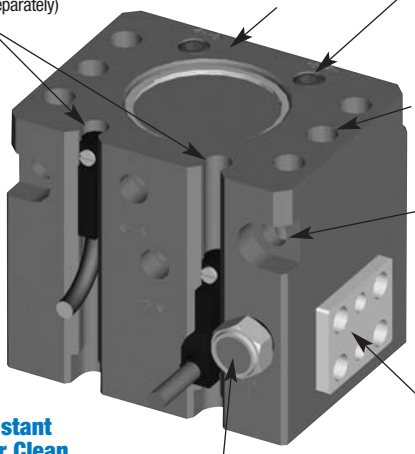

DIRECTCONNECT™ Mounting Patterns
DIRECTCONNECT™ tapped & dowel mounting surfaces on top and back of body

Dowel Holes
Slip fit dowel pin holes in body and jaws

Thru-Body Mounting
Front-to-back thru C'bores for socket head cap screw mounting

Extremely Rugged Design
Jaws are supported throughout the length of the body

Bottom Jaw Mounting (-B) Option
For alternate finger mounting (standard side mount jaws shown)

Corrosion Resistant Hardware (-S) or Clean Room (-CR) Options
Both options have stainless and brass hardware. Clean room option uses clean room grade greases

Purge/Scavenge Port
Used with a vacuum for clean room environments or positive pressure with harsh environments

Jaw Components
Hardened and precision ground steel for minimum jaw play with hard plating for wear resistance and long life

Operating Principle

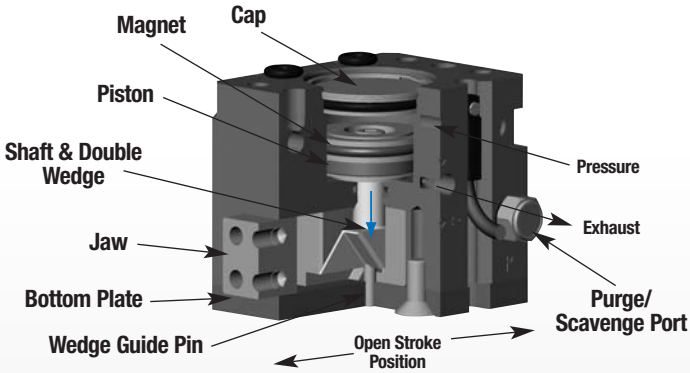

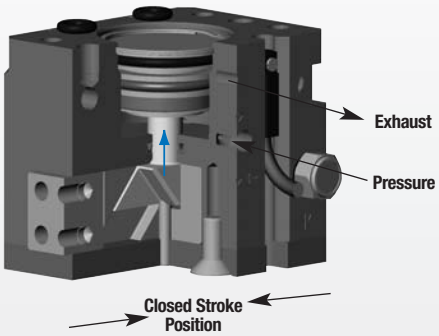

- A double acting piston is connected by a shaft to a double-sided wedge.
- The wedge slides in a slot located in each of the jaws converting vertical motion of the wedge into horizontal synchronous motion of the jaws.
- The large surface area of the wedge minimizes friction wear.
- This gripper is suitable for internal or external gripping and can be mounted in any orientation.

U.S. Patent # 5,125,708
Designed and manufactured in the USA

Style -DPDS Parallel Gripper

Size -047M

Style:	DPDS-047M	
Stroke:	0.13 in.	3.2 mm
Grip Force:	14 lbs.	62 N
Weight:	0.086 lbs.	0.04 Kg

-B Bottom Jaw Mount Shown

See Page 1.72

Style -DPDS Parallel Gripper

Size -056M

Style:	DPDS-056M	
Stroke:	0.19 in.	4.8 mm
Grip Force:	22 lbs.	98 N
Weight:	0.155 lbs.	0.07 Kg

-B Bottom Jaw Mount Shown

See Page 1.74

Style -DPDS Parallel Gripper

Size -088M

Style:	DPDS-088M	
Stroke:	0.25 in.	6.4 mm
Grip Force:	50 lbs.	222 N
Weight:	0.51 lbs.	0.23 Kg

-B Bottom Jaw Mount Shown

See Page 1.76

Style -DPDS Parallel Gripper

Size -125M

Style:	DPDS-125M	
Stroke:	0.38 in.	9.5 mm
Grip Force:	100 lbs.	445 N
Weight:	1.03 lbs.	0.46 Kg

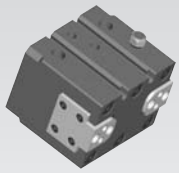

-B Bottom Jaw Mount Shown

See Page 1.78

Style -DPDS Parallel Gripper

Size -175M

Style:	DPDS-175M	
Stroke:	0.50 in.	12.7 mm
Grip Force:	200 lbs.	890 N
Weight:	3.70 lbs.	1.68 Kg

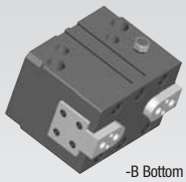

-B Bottom Jaw Mount Shown

See Page 1.80

Style -DPDS Parallel Gripper

Size -250M

Style:	DPDS-250M	
Stroke:	0.75 in.	19.1 mm
Grip Force:	400 lbs.	1779 N
Weight:	6.08 lbs.	2.76 Kg

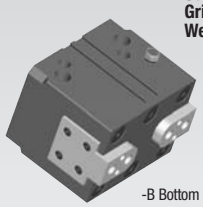

-B Bottom Jaw Mount Shown

See Page 1.82

Parallel Grippers - DPDL DIRECTCONNECT™ Modular Series

NO ADAPTER PLATES!

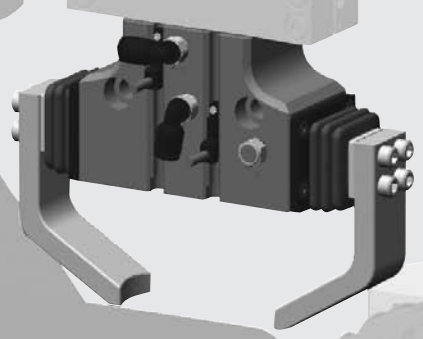

- **Multiple mounting locations:** DIRECTCONNECT™ tapped and dowel mounting on top and back of body.
- **Thru body mounting:** Front-to-back thru-body mounting.
- **Multiple air port positions:** Tapped air ports on front, top, and back sides are standard.
- **Manifold air porting:** Top and back air ports can be manifold o-ring sealed.
- **Front purge/scavenge port:** Negative pressure used as a scavenge port used for cleanroom applications. Positive pressure used as a purge port to repel contaminants in harsh environment. Port can also be used for lubrication.
- **Sensing:** Full range adjustable magneto resistive sensors.
- **Different strokes:** All gripper sizes are available in 3 different strokes.
- **Multiple jaw styles:** All sizes available with end mounts jaws as standard or bottom mount jaws as an option.
- **True sealed jaw option:** Rugged integral rubber boot seals the unit against harsh environments. Designed to be used in machine coolant and metal chip environment applications.
- **Long finger applications:** Rigid design and full body support of jaws allows for longer finger lengths.

Mounting Information:

Grippers can be mounted & operated in any orientation

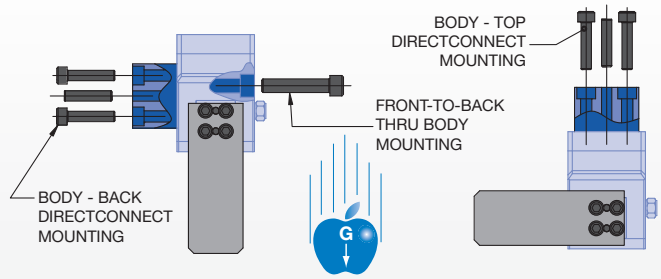

Body mounts with screws and locates with slip fit dowel pins for accuracy

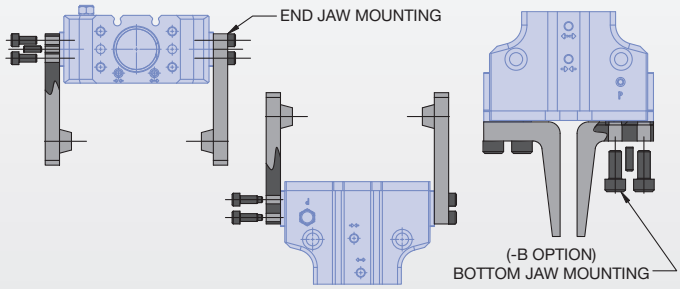

Fingers attach with screws and locate on jaws by keying and/or dowel pins. Fingers can be mounted in any orientation with respect to the jaw.

Technical Specifications:

Pneumatic Specifications	**Imperial**	**Metric**
Pressure Operating Range	**20-100 psi**	**1.5-7 bar**
Cylinder Type	**Double Acting**	
Dynamic Seals	**Internally Lubricated Buna-N**	
Valve Required to Operate	**4-way, 2-position**	
Air Quality Requirements		
Air Filtration	**40 Micron or Better**	
Air Lubrication	**Not Necessary***	
Air Humidity	**Low Moisture Content (dry)**	
Temperature Operating Range		
Buna-N Seals (standard)	**-30°~180° F**	**-35°~80° C**
Viton® Seals (optional)	**-20°~300° F**	**-30°~150° C**
Maintenance Specifications†		
Expected Life		
Normal Application	**5 million cycles**	
w/ Preventative Maintenance	**10+ million cycles***	
Field Repairable	**Yes**	
Seal Repair Kits Available	**Yes**	
-E Option Seals Jaw Rubber Boot Specifications		
Boot Material	**60 Durometer Buna-N (Nitrile)**	
Temperature Rating (boot only)	**-20°~250° F**	**-30°~120° C**
Compatible Chemicals:	**Water, Coolant, Petroleum Oils, Silicone Lubricants, Dilute Acids & Alkalis, Hydraulic Fluid, Transmission Fluid**	
Non-Compatible Chemicals:	**Ozone, Ketones, Strong Acids, Brake Fluid**	
Example Applications:	**Grinding Dust, Machine Chip & Coolant, Painting, Paper Dust, Washdown Applications**	

Application Restrictions
Applications where mechanism lubricant could cause contamination (use **-E** sealed jaw option)

*Addition of lubrication will greatly increase service life
†See Maintenance Section

Product Features

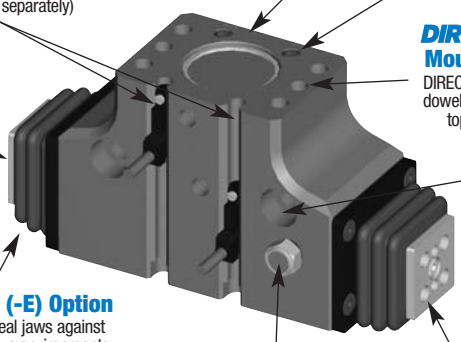

Hard Coat Anodize
The body and bottom plate have hard-coat anodize 60RC with Teflon® impregnation

High Temperature
Optional Viton® seals are available for high temperature applications

Multiple Air Port Locations
3 standard airport locations (front, back, & top)

Sensor Mounting Slots
Standard mounting slots for magneto resistive (sensors sold separately)

One Piece Body
One piece lightweight aircraft quality aluminum body

Manifold Air Ports
Back & top air ports can be O-ring manifold sealed to eliminate air lines

DIRECTCONNECT™ Mounting Patterns
DIRECTCONNECT™ tapped & dowel mounting surfaces on top and back of body

Extremely Rugged Design
Jaws are supported throughout the length of the body

Thru-Body Mounting
Front-to-back thru C'bores for socket head cap screw mounting

Sealed Jaws (-E) Option
Buna-N bellows seal jaws against damaging hazardous environments (machining chips & coolant, grinding dust, paper mill environments, etc.)

Bottom Jaw Mounting (-B) Option
For alternate finger mounting (standard side mount jaws shown)

Purge/Scavenge Port
Used with a vacuum for clean room environments or positive pressure with harsh environments

Corrosion Resistant Hardware (-S) or Clean Room (-CR) Options
Both options have stainless and brass hardware. Clean room option uses clean room grade greases

Dowel Holes
Slip fit dowel pin holes in body and jaws

Jaw Components
Hardened and precision ground steel for minimum jaw play with hard plating for wear resistance and long life

Operating Principle

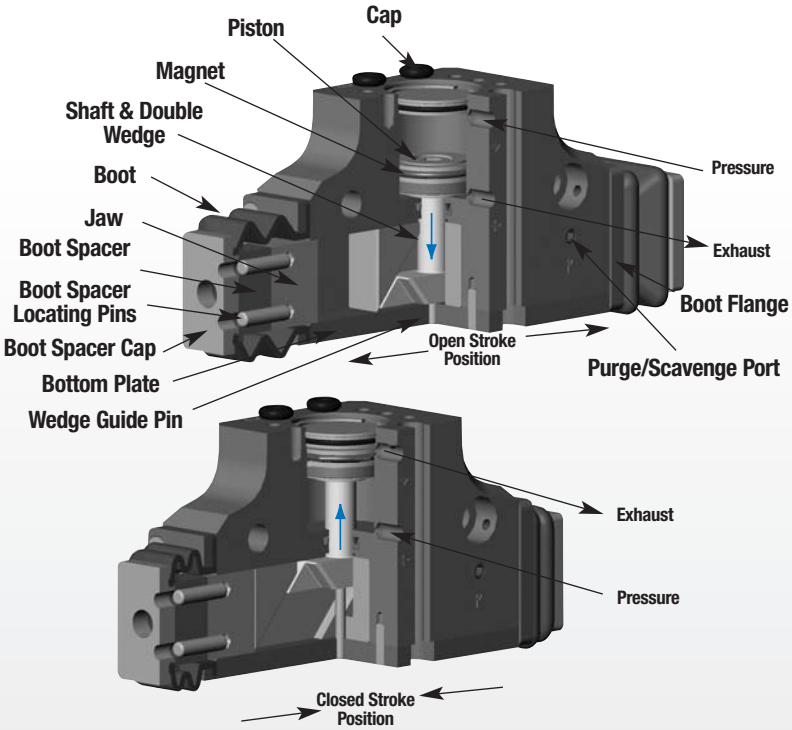

- A double acting piston is connected by a shaft to a double-sided wedge.
- The wedge slides in a slot located in each of the jaws converting vertical motion of the wedge into horizontal synchronous motion of the jaws.
- The large surface area of the wedge minimizes friction wear.
- This gripper is suitable for internal or external gripping and can be mounted in any orientation.

U.S. Patent # 5,125,708
Designed and manufactured in the USA

Style -DPDL Parallel Gripper

Size -047M

Style:	DPDL-047M	
Stroke:	0.38 in.	9.5 mm
Grip Force:	14 lbs.	62 N
Weight:	0.186 lbs.	0.08 Kg

-B Bottom Jaw Mount Shown

See Page 1.88

Style -DPDL Parallel Gripper

Size -056M

Style:	DPDL-056M	
Stroke:	0.50 in.	12.7 mm
Grip Force:	22 lbs.	98 N
Weight:	0.315 lbs.	0.14 Kg

-B Bottom Jaw Mount Shown

See Page 1.90

Style -DPDL Parallel Gripper

Size -088M

Style:	DPDL-088M	
Stroke:	0.75 in.	19.1 mm
Grip Force:	50 lbs.	222 N
Weight:	0.95 lbs.	0.43 Kg

-B Bottom Jaw Mount Shown

See Page 1.92

Style -DPDL Parallel Gripper

Size -125M

Style:	DPDL-125M	
Stroke:	1.00 in.	25.4 mm
Grip Force:	100 lbs.	445 N
Weight:	1.99 lbs.	0.90 Kg

-B Bottom Jaw Mount Shown

See Page 1.94

Style -DPDL Parallel Gripper

Size -175M

Style:	DPDL-175M	
Stroke:	1.50 in.	38.1 mm
Grip Force:	200 lbs.	890 N
Weight:	6.02 lbs.	2.73 Kg

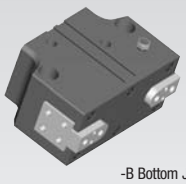

-B Bottom Jaw Mount Shown

See Page 1.96

Style -DPDL Parallel Gripper

Size -250M

Style:	DPDL-250M	
Stroke:	2.000 in.	50.8 mm
Grip Force:	400 lbs.	1779 N
Weight:	12.04 lbs.	5.46 Kg

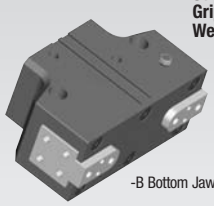

-B Bottom Jaw Mount Shown

See Page 1.98

Parallel Grippers - Long Stroke Series

- **Compact and robust design**
  This gripper is designed for use in confined spaces, combining long strokes with the high gripping force provided by two simultaneously acting pistons.
- **For long finger applications:**
  Jaws are supported throughout the length of the body, enabling long fingers.
- **Multipurpose gripper:**
  A wide range of options and accessories (safety springs, in-line jaws, magneto resistive or inductive sensors) allow these grippers to be used in a number of applications.
- **Harsh environments:**
  Enclosed, shielded design repels chips and other particulate from internal drive mechanism.
- **Spring assist, spring return:**
  Can be used as failsafe, single acting spring return, or double acting spring assist.

Mounting Information:

Grippers can be mounted & operated in any orientation

The gripper is protected from falling debris when it is mounted and operated upside down.

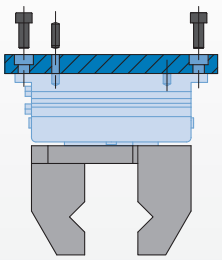

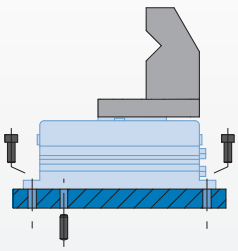

Gripper locates from the top with 2 dowel pins and can be assembled with 4 screws from the top or bottom.

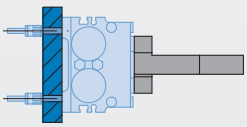

Gripper can be operated with rear inlets (manifold).

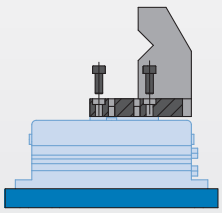

Fingers are located on jaws with 2 dowel pins and assembled with 2 screws.

Technical Specifications:

Pneumatic Specifications	**Imperial**	**Metric**
Pressure Operating Range:		
Standard	**30-100 psi**	**2-7 bar**
with **-R** Spring Option	**60-100 psi**	**4-7 bar**
Cylinder Type	**Double Acting**	
Dynamic Seals	**Internally Lubricated Buna-N**	
Valve Required to Operate	**4-way, 2-position for Double Acting *or* 3-way, 2-position for Single Acting**	

Air Quality Requirements	
Air Filtration	**40 Micron or Better**
Air Lubrication	**Not Necessary***
Air Humidity	**Low Moisture Content (dry)**

Temperature Operating Range		
Buna-N Seals (Standard)	**-4°~180° F**	**-20°~80° C**

Maintenance Specifications†	
Expected Life	
Normal Application	**5 million cycles**
w/ Preventative Maintenance	**10+ million cycles***
Field Repairable	**Yes**
Seal Repair Kits Available	**Yes**

*Addition of lubrication will greatly increase service life
†See Maintenance Section

DIRECT CONNECT™

Product Features

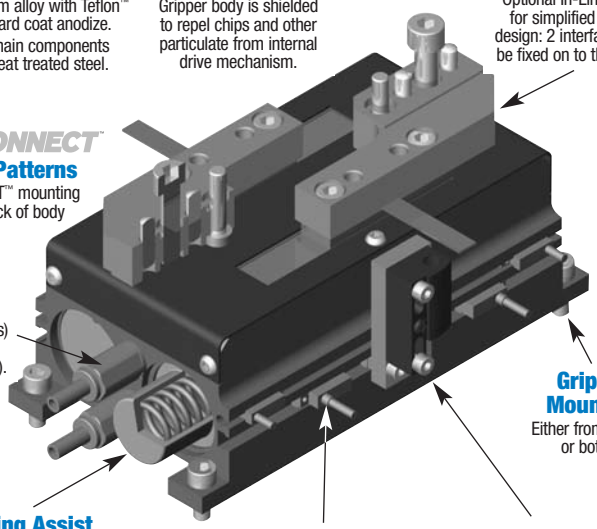

Quality Components
Made of aluminum alloy with Teflon™ impregnated hard coat anodize.
The device's main components are made of heat treated steel.

Shielded Design
Gripper body is shielded to repel chips and other particulate from internal drive mechanism.

In-Line Jaws
Optional In-Line Jaws for simplified finger design: 2 interfaces can be fixed on to the jaws.

DIRECTCONNECT™ Mounting Patterns
DIRECTCONNECT™ mounting surface on back of body

Air Ports
Either lateral on 2 sides (couplings) or at the rear (manifold sealing).

Gripper Mounting
Either from the top or bottom

Spring Assist
Option (-R) to restrain the component, should the air supply fail or to use the gripper in single acting mode by clamping on the shaft or the bore.

Magnetic Sensor
Piston is equipped with the magnet and the body has mounting slots.

Inductive Sensor Mounting Kit
Mounting kit has 2 flags and 3 adjustable sensor holders.

Operating Principle

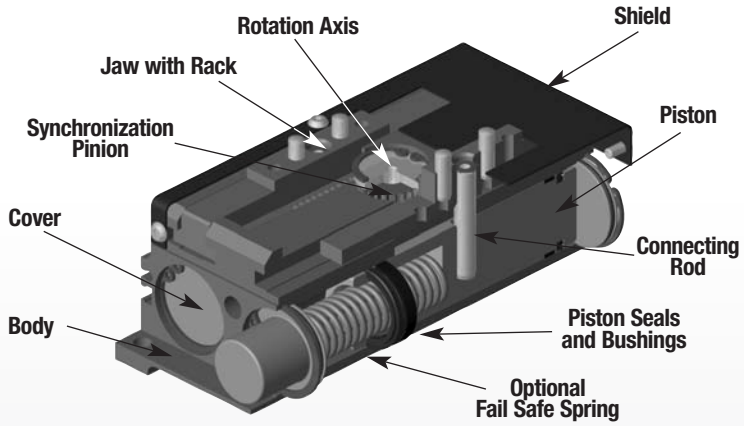

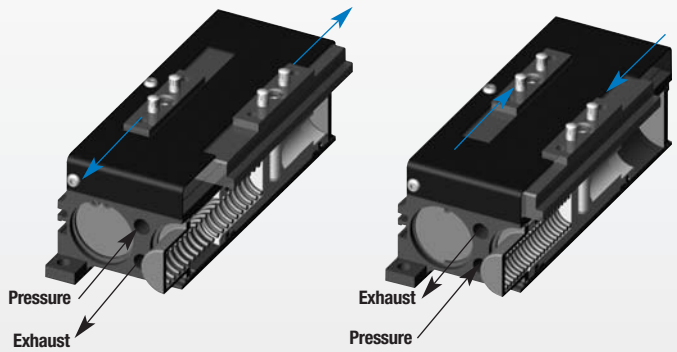

- Dual double acting pistons connected to both jaws and synchronized by the pinion actuate in opposite directions.
- Each jaw is guided by a T-slot in the body.
- Jaw Synchronization is achieved by a rack and pinion system.
- For Non-Synchronous operation, the pinion can be removed.
- Suitable for internal or external gripping.

Style-DPL Parallel Gripper

Size -2520

Style:	DPL-2520	
Stroke:	1.57 in.	40 mm
Grip Force:	182 lbs.	811 N
Weight:	3.04 lbs.	1.38 Kg

See Page 1.104

Style-DPL Parallel Gripper

Size -2535

Style:	DPL-2535	
Stroke:	2.76 in.	70 mm
Grip Force:	173 lbs.	768 N
Weight:	3.97 lbs.	1.80 Kg

See Page 1.105

Style-DPL Parallel Gripper

Size -3230

Style:	DPL-3230	
Stroke:	2.36 in.	60 mm
Grip Force:	306 lbs.	1359 N
Weight:	4.98 lbs.	2.26 Kg

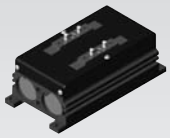

See Page 1.106

Style-DPL Parallel Gripper

Size -3250

Style:	DPL-3250	
Stroke:	3.94 in.	100 mm
Grip Force:	294 lbs.	1306 N
Weight:	6.66 lbs.	3.02 Kg

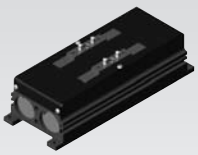

See Page 1.107

Style-DPL Parallel Gripper

Size -4040

Style:	DPL-4040	
Stroke:	3.15 in.	80 mm
Grip Force:	457 lbs.	2035 N
Weight:	9.48 lbs.	4.30 Kg

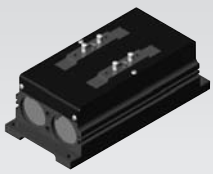

See Page 1.108

Style-DPL Parallel Gripper

Size -4070

Style:	DPL-4070	
Stroke:	5.51 in.	140 mm
Grip Force:	456 lbs.	2029 N
Weight:	13.23 lbs.	6.00 Kg

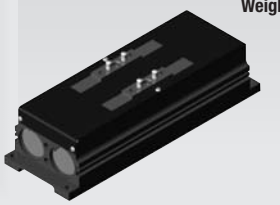

See Page 1.109

Parallel Grippers - Miniature Series Double Wedge

- **General purpose:**
  This style gripper is the most widely used in the industry. It is a rugged design and supplies very high grip force.
- **Small parts handling:**
  Compact size, high gripping force, and extended jaw design facilitates finger attachment for smaller parts.
- **Robotic applications:**
  High grip force to weight ratio make these grippers very popular on small robots.
- **Miniature Size:**
  Allows banks of grippers to be mounted in close proximity for multiple part picking and placing.

Mounting Information:

Grippers can be mounted & operated in any orientation

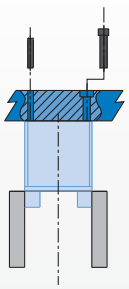

Body mounts with screws and locates with slip fit dowel pins for accuracy

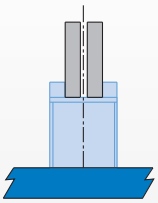

Warning! Protect jaw mechanism from falling debris when mounted upside down

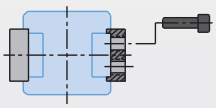

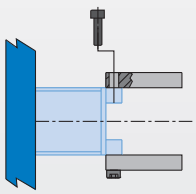

Fingers attach to jaws with screws and locate by keying

Technical Specifications:

Pneumatic Specifications	**Imperial**	**Metric**
Pressure Operating Range	**40-100 psi**	**3-7 bar**
Cylinder Type	**Double Acting**	
Dynamic Seals	**Internally Lubricated Buna-N**	
Valve Required to Operate	**4-way, 2-position**	

Air Quality Requirements	
Air Filtration	**40 Micron or Better**
Air Lubrication	**Not Necessary***
Air Humidity	**Low Moisture Content (dry)**

Temperature Operating Range		
Buna-N Seals (standard)	**-30°~180° F**	**-35°~80° C**
Viton® Seals (optional)	**-20°~300° F**	**-30°~150° C**

Maintenance Specifications†	
Expected Life	
Normal Application	**5 million cycles**
w/ Preventative Maintenance	**10+ million cycles***
Field Repairable	**Yes**
Seal Repair Kits Available	**Yes**

Application Restrictions
- Dirty or gritty environments
- Machining operations generating chips
- Environments with loose particulate
- Applications where mechanism lubricant could cause contamination

*Addition of lubrication will greatly increase service life
†See Maintenance Section

Product Features

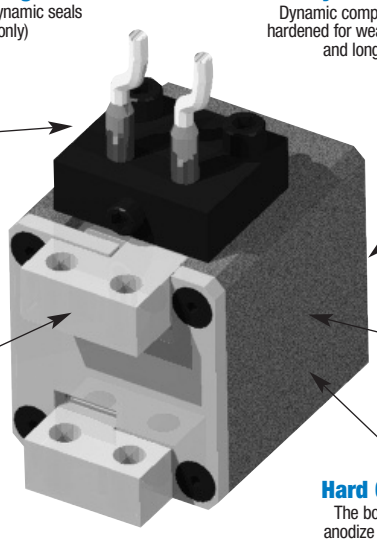

Self Lubricating Seals
Self lubricating dynamic seals (Buna-N only)

Quality Components
Dynamic components are hardened for wear resistance and long life

Sensors/ Mounting Kit
Read position of jaw (Sold Separately)

Dowel Holes
Slip fit dowel pin holes in body

Accessory Mounting Holes
(Mounts sensors to unit)

One Piece Body
One piece 7075-T6 aircraft quality aluminum body

Rugged Construction
Jaws are supported throughout the length of the body and are precision ground for minimal jaw play

Optional RP-5 Spring Close
RP-5 has an optional spring closed feature for failsafe operation

Hard Coat Anodize
The body has hard-coat anodize 60 RC with Teflon® impregnation

Operating Principle

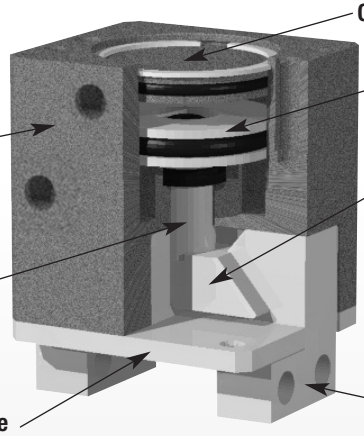

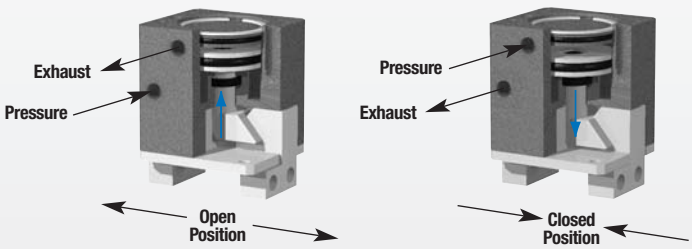

- A double acting piston is connected by a shaft to a double sided wedge.
- The wedge slides in a slot located in each of the jaws converting vertical motion of the wedge into horizontal synchronous motion of the jaws.
- The large surface area of the wedge minimizes frictional wear.
- This gripper is suitable for internal or external gripping.

U.S. Patent # 5,125,708
Designed and manufactured in the USA

Style-RP Parallel Gripper

Size -5M

Style:	RP-5	RP-5M
Stroke:	.16 in.	4.1 mm
Grip Force:	35 lb	156 N
Weight:	.18 lb	.08 Kg

See Page 1.116

Style-RP Parallel Gripper

Size -5M-FS

Style:	RP-5	RP-5M
Stroke:	.16 in.	4.1 mm
Grip Force:*	40 lb	178 N
Weight:	.18 lb	.08 Kg

*Grip force with spring assist

See Page 1.116

Style-RP Parallel Gripper

Size -10M

Style:	RP-10	RP-10M
Stroke:	1/4 in.	6.4 mm
Grip Force:	40 lb	175 N
Weight:	.28 lb	.13 Kg

See Page 1.117

Note: Please refer to our new DPDS/DPDL Series grippers found on pages 1.70-1.101. The RP Series is still available for sale and the related information remains available on our website but we encourage you to consider the new DPDS/DPDL Series grippers found on pages 1.70-1.101 for new projects

Parallel Grippers - Double Wedge Series

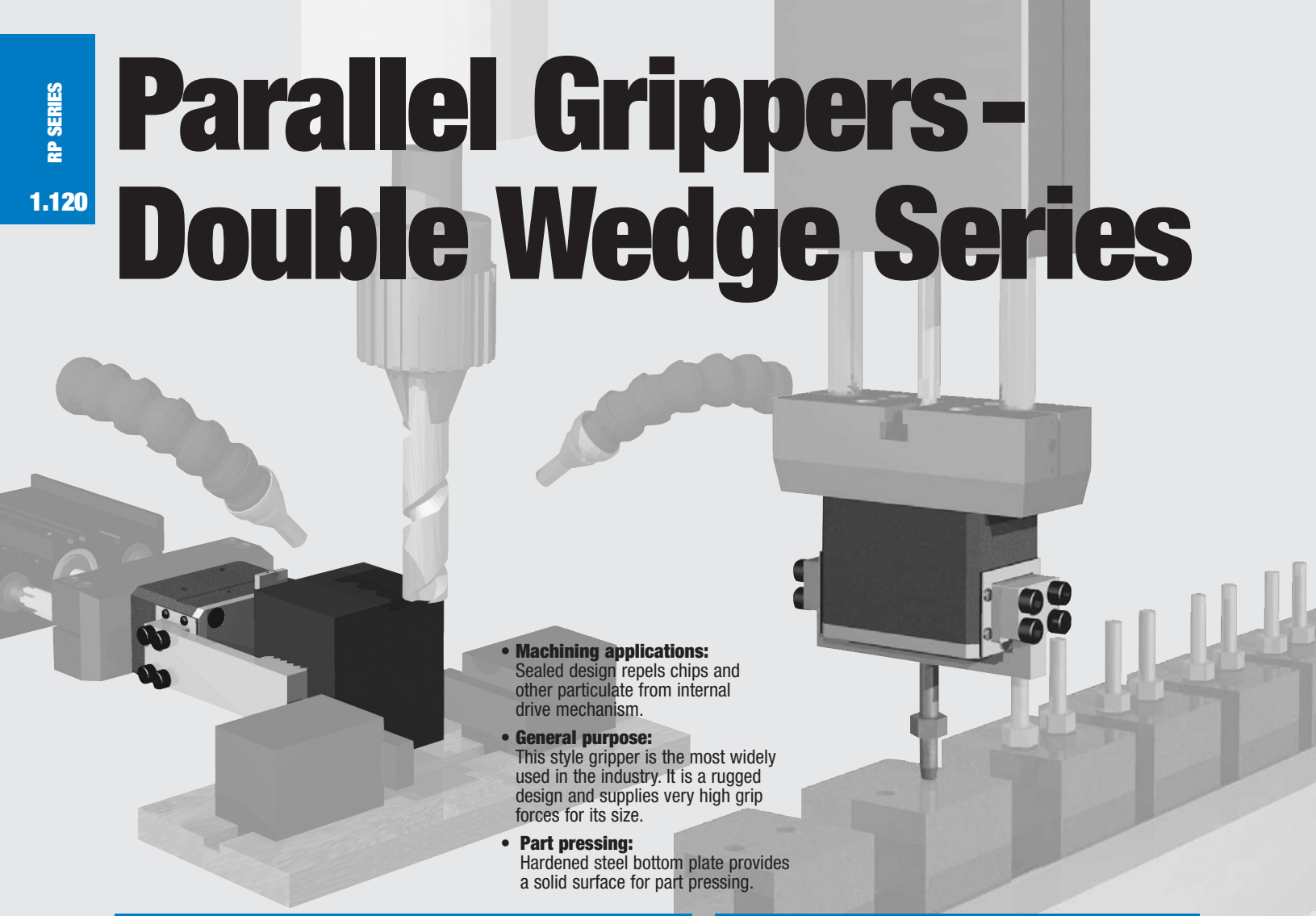

- **Machining applications:** Sealed design repels chips and other particulate from internal drive mechanism.
- **General purpose:** This style gripper is the most widely used in the industry. It is a rugged design and supplies very high grip forces for its size.
- **Part pressing:** Hardened steel bottom plate provides a solid surface for part pressing.

Mounting Information:

Grippers can be mounted & operated in any orientation

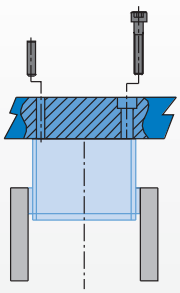

Body mounts with screws and locates with slip fit dowel pins for accuracy

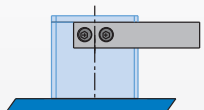

Unit can be mounted and operated upside down

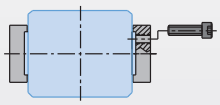

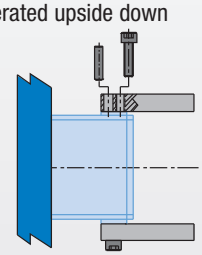

Fingers attach to jaws with screws and locate by keying or dowel pins

Technical Specifications:

Pneumatic Specifications	**Imperial**	**Metric**
Pressure Operating Range	40-100 psi	3-7 bar
Cylinder Type	Double Acting	
Dynamic Seals	Internally Lubricated Buna-N	
Valve Required to Operate	4-way, 2-position	
Air Quality Requirements		
Air Filtration	40 Micron or Better	
Air Lubrication	Not Necessary*	
Air Humidity	Low Moisture Content (dry)	
Temperature Operating Range		
Buna-N Seals (standard)	-30°~180° F	-35°~80° C
Viton® Seals (optional)	-20°~300° F	-30°~150° C
Maintenance Specifications †		
Expected Life		
Normal Application	5 million cycles	
w/ Preventative Maintenance	10+ million cycles*	
Field Repairable	Yes	
Seal Repair Kits Available	Yes	

*Addition of lubrication will greatly increase service life
† See Maintenance Section

Product Features

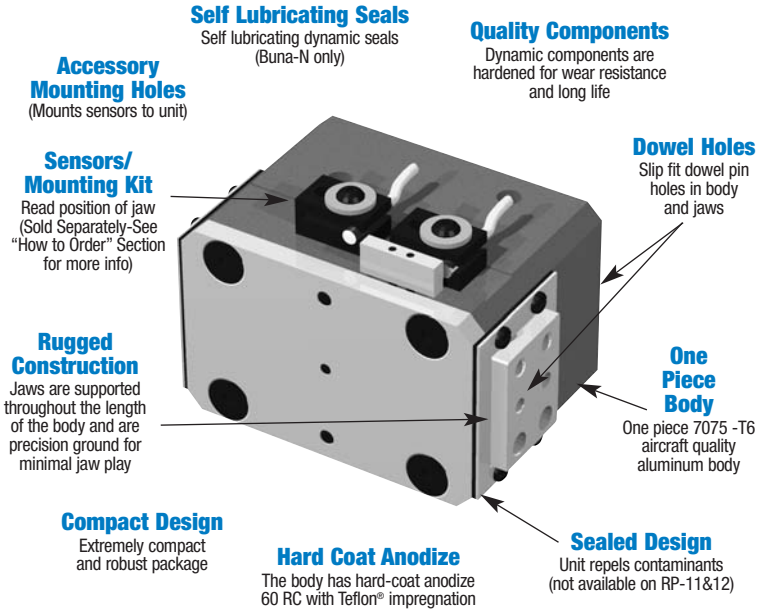

Operating Principle

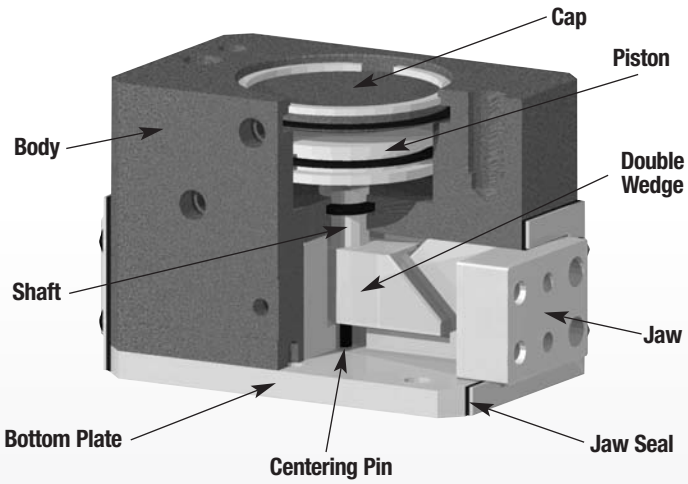

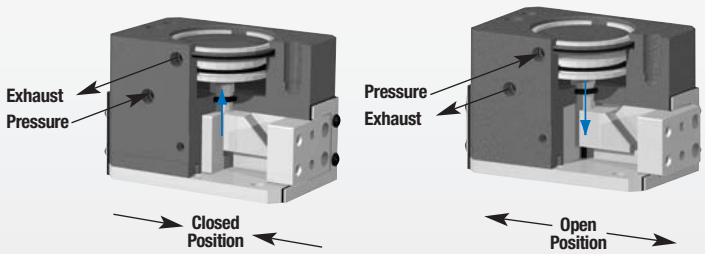

- A double acting piston is connected by a shaft to a double sided wedge.
- The wedge slides in a slot located in each of the jaws converting vertical motion of the wedge into horizontal synchronous motion of the jaws.
- The large surface area of the wedge minimizes frictional wear.
- This gripper is suitable for internal or external gripping.

U.S. Patent # 5,125,708
Designed and manufactured in the USA

Style-RP Parallel Gripper

Size-11M

Style:	RP-11	RP-11M
Stroke:	0.25 in.	6.4 mm
Grip Force:	40 lbs.	178 N
Weight:	.25 lbs.	.11 Kg

See Page 1.122

Style-RP Parallel Gripper

Size-12M

Style:	RP-12	RP-12M
Stroke:	0.38 in.	9.5 mm
Grip Force:	40 lbs.	178 N
Weight:	.56 lbs.	.25 Kg

See Page 1.123

Style-RP Parallel Gripper

Size-15M

Style:	RP-15	RP-15M
Stroke:	0.50 in.	12.7 mm
Grip Force:	70 lbs.	310 N
Weight:	1.25 lbs.	.57 Kg

See Page 1.124

Style-RP Parallel Gripper

Size-17M

Style:	RP-17	RP-17M
Stroke:	0.75 in.	19.1 mm
Grip Force:	220 lbs.	979 N
Weight:	2.2 lbs.	1.0 Kg

See Page 1.125

Style-RP Parallel Gripper

Size-18M

Style:	RP-18	RP-18M
Stroke:	1.25 in.	31.8 mm
Grip Force:	400 lbs.	1779 N
Weight:	7.7 lbs.	3.5 Kg

See Page 1.126

Style-RP Parallel Gripper

Size-19M

Style:	RP-19	RP-19M
Stroke:	2.00 in.	50.8 mm
Grip Force:	600 lbs.	2669 N
Weight:	21 lbs.	9.5 Kg

See Page 1.127

Note: Please refer to our new DPDS/DPDL Series grippers found on pages 1.70-1.101. The RP Series is still available for sale and the related information remains available on our website but we encourage you to consider the new DPDS/DPDL Series grippers found on pages 1.70-1.101 for new projects

Parallel Grippers - Spring Assist Series

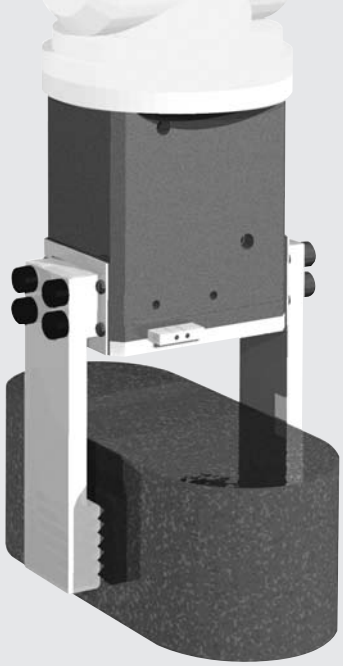

- **Patented double wedge design:** This gripper utilizes our patented double wedge design for actuation and synchronization.
- **Fail safe operation:** The force supplied from the internal spring can be used to maintain gripping force if the gripper looses air pressure.
- **Single acting spring return:** A gripper can be actuated in one direction working against the spring with a single air supply line and actuate in the opposite direction with the force of the spring.
- **Double acting spring assist:** Spring assist along with the pressurized gripping motion generates resulting grip force that is greatly increased allowing higher grip forces at lower air pressures.
- **Internal or external gripping:** This gripper is available in a spring closed model (**-C**) for external gripping or spring open model (**-O**) for internal gripping.

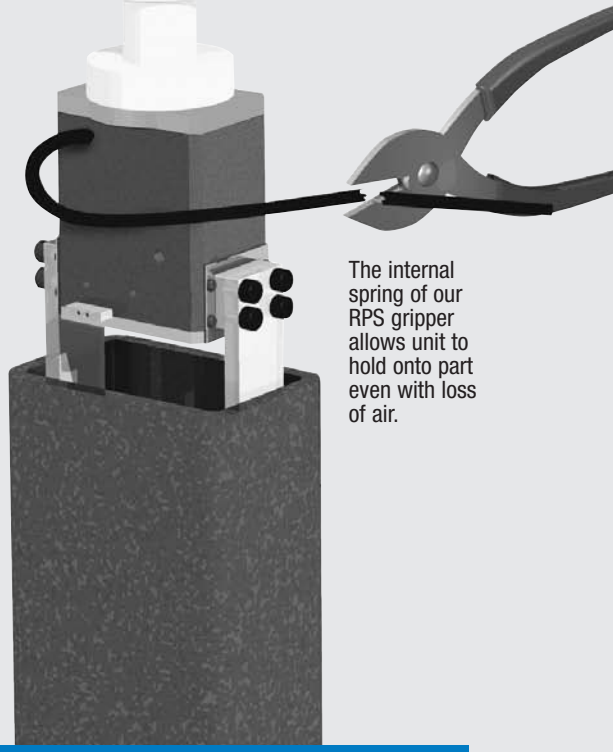

The internal spring of our RPS gripper allows unit to hold onto part even with loss of air.

Mounting Information:

Grippers can be mounted & operated in any orientation

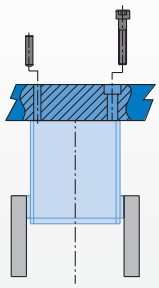

Body mounts with screws and locates with dowel pins for accuracy

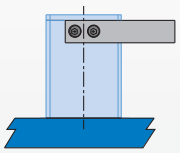

Unit can be mounted and operated upside down

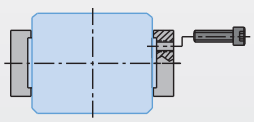

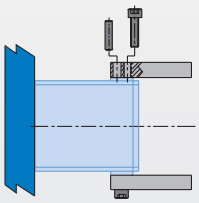

Fingers attach to jaws with screws and locate by keying or dowel pins

Technical Specifications:

Pneumatic Specifications	**Imperial**	**Metric**
Pressure Operating Range	**50-100 psi**	**3.5-7 bar**
Cylinder Type	**Double Acting Spring Assist *or* Single Acting Spring Return**	
Dynamic Seals	**Internally Lubricated Buna-N**	
Valve Required to Operate	**4-way, 2-position for Double Acting *or* 3-way, 2-position for Single Acting**	
Air Quality Requirements		
Air Filtration	**40 Micron or Better**	
Air Lubrication	**Not Necessary***	
Air Humidity	**Low Moisture Content (dry)**	
Temperature Operating Range		
Buna-N Seals (standard)	**-30°~180° F**	**-35°~80° C**
Viton® Seals (optional)	**-20°~300° F**	**-30°~150° C**
Maintenance Specifications†		
Expected Life		
Normal Application	**5 million cycles**	
w/ Preventative Maintenance	**10+ million cycles***	
Field Repairable	**Yes**	
Seal Repair Kits Available	**Yes**	

*Addition of lubrication will greatly increase service life
†See Maintenance Section

Product Features

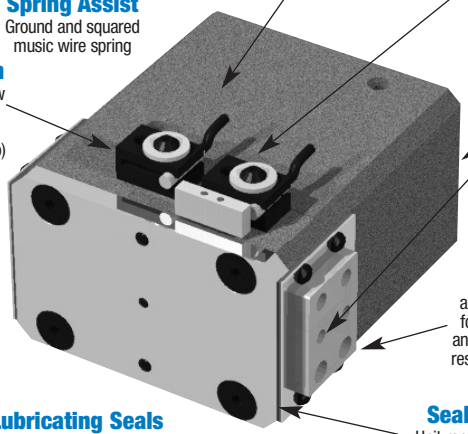

One Piece Body Design
One piece lightweight aluminum body made of 7075-T6 aircraft quality aluminum

Hard Coat Anodize
The body has hard-coat anodize 60 RC with Teflon® impregnation

Accessory Mounting Holes
(Mounts sensors to unit)

Spring Assist
Ground and squared music wire spring

Dowel Holes
Slip fit dowel pin holes in body and jaws

Sensor Option
Reads position of jaw (sold separately- see "How to order" Section for more info)

Extremely Robust Design
Jaws are supported throughout the length of the body

Jaws
Jaw components are precision ground for minimal jaw play and hardened for wear resistance and long life

Self Lubricating Seals
Self lubricating dynamic seals (Buna-N only)

Sealed Design
Unit repels contaminants (not available on RPS-11&12)

Operating Principle (RPS-C shown)

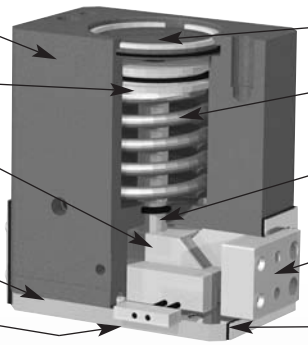

RPS-O Spring Open

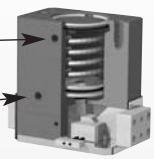

Single Acting Spring Open

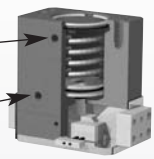

Double Acting Spring Assist Open

RPS-C Spring Closed

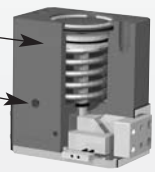

Single Acting Spring Closed

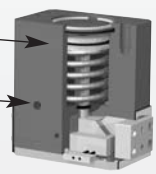

Double Acting Spring Assist Closed

- A double acting piston is connected by a shaft to a double sided wedge.
- The wedge slides in a slot located in each of the jaws converting vertical motion of the wedge into horizontal synchronous motion of the jaws.
- The large surface area of the wedge minimizes frictional wear.
- The built-in cylinder and spring can be used as either a double acting cylinder with spring assist or as a single acting cylinder with spring return.
- This gripper is suitable for internal or external gripping.

U.S. Patent # 5,125,708 Designed and manufactured in the USA

Style-RP-5-FS Spring Gripper
Size-5

See Page 1.116

Style-RPS Spring Gripper
Size-11M

Style:	RPS-11	RPS-11M
Stroke:	0.25 in.	6.4 mm
Grip Force:	50 lb	222 N
Weight:	.36 lb	.16 Kg

See Page 1.132

Style-RPS Spring Gripper
Size-12M

Style:	RPS-12	RPS-12M
Stroke:	0.38 in.	9.5 mm
Grip Force:	60 lb	270 N
Weight:	.76 lb	.34 Kg

See Page 1.133

Style-RPS Spring Gripper
Size -15M

Style:	RPS-15	RPS-15M
Stroke:	0.50 in.	12.7 mm
Grip Force:	90 lb	400 N
Weight:	1.44 lb	.65 Kg

See Page 1.134

Style-RPS Spring Gripper
Size -17M

Style:	RPS-17	RPS-17M
Stroke:	0.75 in.	19.1 mm
Grip Force:	300 lb	1334 N
Weight:	3.0 lb	1.4 Kg

See Page 1.135

Style-RPS Spring Gripper
Size -18M

Style:	RPS-18	RPS-18M
Stroke:	1.25 in.	31.8 mm
Grip Force:	600 lb	2669 N
Weight:	11 lb	5.0 Kg

See Page 1.136

Parallel Grippers - Two Jaw Precision Spring Series

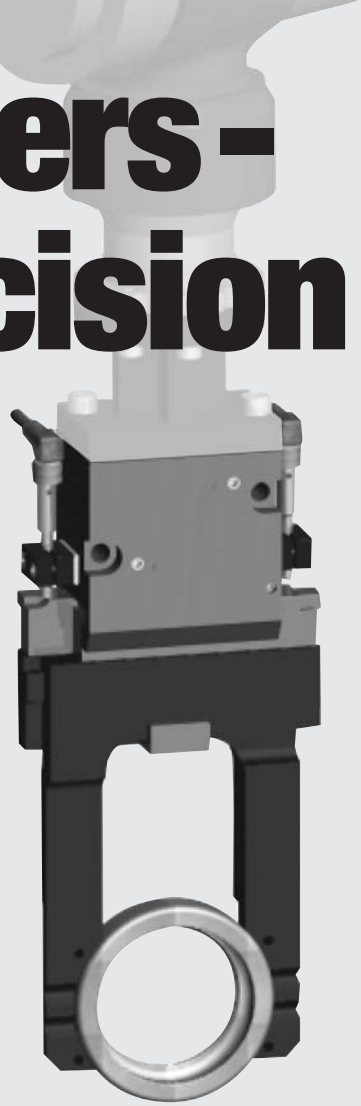

- **Compact and shielded gripper:**
  This gripper is designed for use in confined spaces, combining long strokes with a high grip force. Standard safety springs retain the components should the air supply fail, or during gripping, the spring provides additional gripforce.
- **Multipurpose gripper:**
  The safety springs allow this gripper to be used to clamp on arbor or in bore without the need for any modifications. All the user has to do is to change the jaw position in the jaw holders.
- **Harsh environments:**
  Shielded design repels chips and other particulate from internal drive mechanism.

Mounting Information:

Grippers can be mounted & operated in any orientation

The gripper is protected from falling debris when it is mounted and operated upside down.

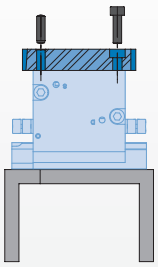

Gripper is located from the top with 2 dowel pins and assembled with 2 screws (by pulling).

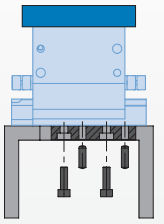

Fingers are located on jaws with 2 dowel pins and assembled with 2 screws.

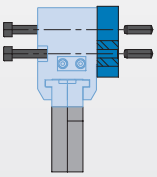

Gripper is located on the side with 2 dowel pins and assembled with 2 through body screws.

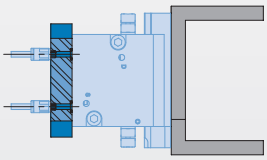

Gripper can be operated utilizing top manifold air ports.

Technical Specifications:

Pneumatic Specifications	**Imperial**	**Metric**
Pressure Operating Range	**45-100 psi**	**3-7 bar**
Cylinder Type	**Double Acting Spring Assist *or* Single Acting Spring Return**	
Dynamic Seals	**Internally Lubricated Buna-N**	
Valve Required to Operate	**4-way, 2-position for Double Acting *or* 3-way, 2-position for Single Acting**	

Air Quality Requirements	
Air Filtration	**40 Micron or Better**
Air Lubrication	**Not Necessary***
Air Humidity	**Low Moisture Content (dry)**

Temperature Operating Range		
Buna-N Seals (Standard)	**-30°~180° F**	**-35°~80° C**
Viton® Seals (Optional)	**-20°~300° F**	**-30°~150° C**

Maintenance Specifications†	
Expected Life	
Normal Application	**5 million cycles**
w/ Preventative Maintenance	**10+ million cycles***
Field Repairable	**Yes**
Seal Repair Kits Available	**Yes**

*Addition of lubrication will greatly increase service life
†See Maintenance Section

Product Features

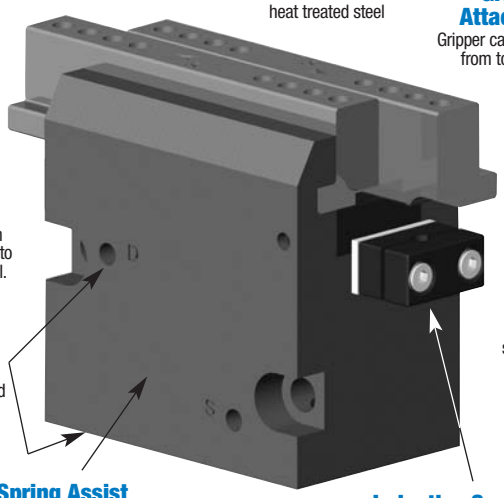

Quality Components
Made from Aluminum alloy with hard coat anodized with Teflon™ Impregnation. The gripper's main components are made of heat treated steel.

Jaws
Jaws are made from heat treated steel

Gripper Attachment
Gripper can be mounted from top or sides

Jaw Attachment
Each jaw allows jaw attachment for gripping on OD or ID

Viton® Seals
Viton® seals for high temperatures (-20°F to +300°F) are optional.

Cover
Gripper body is shielded to repel chips and other particulate from internal drive mechanism.

Multiple Air Ports
Side or top manifold air ports.

Spring Assist
Standard springs allow the gripper to retain the component, should the air supply fail or to use the gripper in single acting mode by clamping on the shaft or the bore.

Inductive Sensoring
Standard inductive sensor holders allow you to attach optional inductive sensor to sense up to two ends of stroke (non-adjustable)

Operating Principle

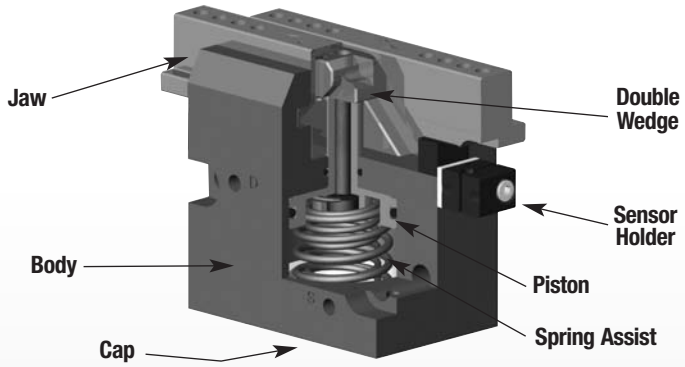

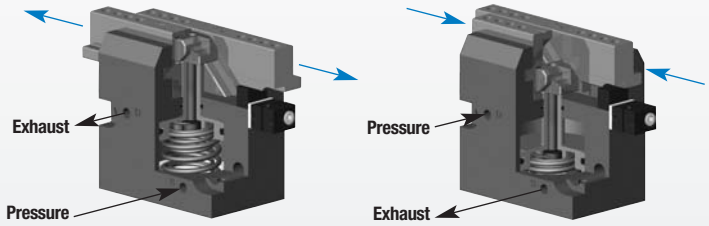

- Two safety springs apply pressure to a piston. One end of the piston is connected to a double wedge that has two opposing racks that slide in the jaw holder slot.
- It converts vertical motion of the piston into horizontal opposite synchronous motion of the 2 jaws.
- In order to benefit from spring power and from pneumatic control power, the pneumatic inlet must be applied to "S" for gripping and with "D" for release. An arrow etched onto each jaw holder indicates the gripping direction.
- Springs can be used to increase the grip force or to hold part in the event of air loss. It also allows the gripper to be used in single acting mode.

Style-GC Parallel Gripper

Size -25

Style:	GC-25	
Stroke:	0.79 in.	20 mm
Grip Force:	106 lbs.	474 N
Weight:	0.77 lbs.	0.35 Kg

See Page 1.142

Style-GC Parallel Gripper

Size -45

Style:	GC-45	
Stroke:	1.18 in.	30 mm
Grip Force:	108 lbs.	481 N
Weight:	1.32 lbs.	0.60 Kg

See Page 1.143

Style-GC Parallel Gripper

Size -65

Style:	GC-65	
Stroke:	1.57 in.	40 mm
Grip Force:	179 lbs.	796 N
Weight:	2.87 lbs.	1.30 Kg

See Page 1.144

Style-GC Parallel Gripper

Size -85

Style:	GC-85	
Stroke:	1.97 in.	50 mm
Grip Force:	333 lbs.	1480 N
Weight:	4.85 lbs.	2.20 Kg

See Page 1.145

Style-GC Parallel Gripper

Size -105

Style:	GC105	
Stroke:	2.36 in.	60 mm
Grip Force:	521 lbs.	2318 N
Weight:	9.50 lbs.	4.31 Kg

See Page 1.146

Parallel Grippers - DPW DIRECTCONNECT™ Wide Body Series

NO ADAPTER PLATES!

DIRECTCONNECT™

- **DIRECTCONNECT™ Connectivity:** DIRECTCONNECT™ Tapped and Dowel mounting on body.
- **Large or Wide Parts:** Wide body design provides secure gripping of large & wide parts.
- **Multiple air port positions:** Tapped air ports on top and front are standard.
- **Manifold Air Porting:** Top air ports can be manifold o-ring sealed.
- **Inductive Sensor Flexibility:** Mount either 3mm or 4mm Inductive sensors with the same bracket (3mm only on DPW-250).
- **Magnetoresistive Sensing:** Full range adjustable Magnetoresistive Sensors. Magnet supplied standard.
- **Long Finger Applications:** Jaw support thru the length of the body allows for long fingers to be attached to jaws.
- **Thru Jaw Mounting:** Offers a wider variety of mounting applications for jaws.
- **Shaft Wiper Option:** Rugged urethane shaft wipers seal the unit against harsh environments. Designed to be used in machine coolant and metal chip environment applications.
- **Multiple Strokes:** All gripper sizes are available in 2 different strokes.
- **Non-synchronous motion:** The unit can be made non-synchronous providing independent jaw motion allowing the gripper to pick or place at a point other than its center.

Mounting Information:

Grippers can be mounted & operated in any direction

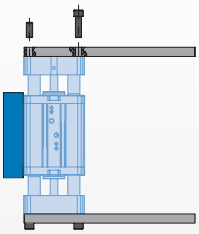

Fingers attach with screws and locate on jaws with dowel pins

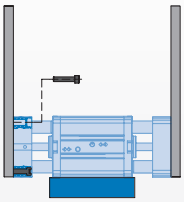

Thru mounting on inside of jaws to allow for alternate finger mounting

Jaw design allows for simplified mounting of fingers

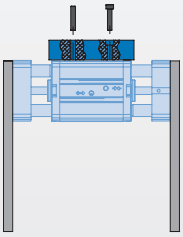

Body mounts on top with screws and locates with slip fit dowel pin holes for accuracy

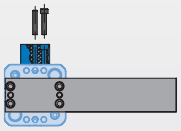

Symmetrical mounting pattern on jaws allows for multiple finger orientation

Technical Specifications:

Pneumatic Specifications	Imperial	Metric
Pressure Operating Range	40-100 psi	3-7 bar
Cylinder Type	Double Acting	
Dynamic Seals	Internally Lubricated Buna-N	
Valve Required to Operate	4-way, 2-position	
Air Quality Requirements		
Air Filtration	40 Micron or Better	
Air Lubrication	Not Necessary*	
Air Humidity	Low Moisture Content (dry)	
Temperature Operating Range		
Buna-N Seals (standard)	-30°~180° F	-35°~80° C
Viton® Seals (optional)	-20°~300° F	-30°~150° C
Maintenance Specifications		
Expected Life		
Normal Application	5 million cycles	
w/ Preventative Maintenance	10+ million cycles*	
Field Repairable	Yes	
Seal Repair Kits Available	Yes	
-W Option Shaft Wiper Specifications		
Wiper Material	90 Durometer Urethane	
Temperature Rating (Wiper Only)	-65°~275° F	-54°~135° C
Compatible Chemicals	water, coolant, petroleum oils, silicone, lubricants, dilute acids & alkalis, hydraulic fluid, transmission fluid	
Non-Compatible Chemicals	Ozone, ketones, strong acids, brake fluid	
Example Applications	Grinding dust, machine chips & coolant, paper dust, washdown	

Application Restrictions
Applications where mechanism lubricant could cause contamination (use -W Shaft Wiper Option in this case)

*Addition of lubrication will greatly increase service life

Product Features

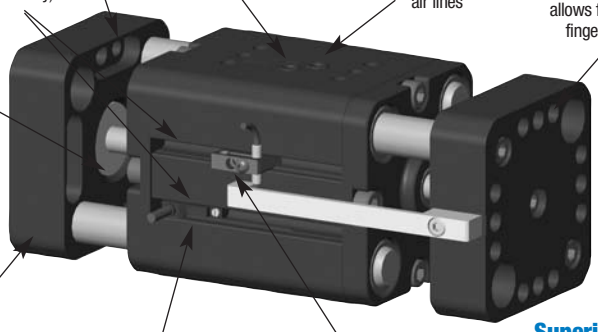

Thru-Jaw Mounting
C'bores on inside of jaws for thru mounting to increase range of applications

DIRECTCONNECT Mounting Patterns
DIRECTCONNECT™ Tapped & Dowel mounting surface on top of body

Sealed Design (-W option)
Urethane shaft wipers prevent against dirty environments (machining chips & coolant, grinding dust, paper mill environments, etc.)

Sensor Mounting Slots
Standard mounting slots for magneto resistive and inductive sensors (sensors sold separately)

Multiple Air Port Locations
2 standard airport location (front & top)

Manifold Air Ports
Top air ports can be O-Ring manifold sealed to eliminate air lines

Simplified Finger Mounting
Large jaw configuration allows for simplified finger mounting

End of Stroke Cushions
Reduce shock of fully open and close strokes

Dowel Holes
Slip fit dowel pin holes in body and jaws

Square-Faced Jaws
Allow for a symmetrical, multi-positional mounting pattern for simplified finger design and increased range of applications

Magneto Resistive Sensors
An alternative option to inductive sensors (magnets supplied standard)

Combined 3mm and 4mm Inductive Sensor Mounting
Allows for either 3 or 4mm Inductive sensors (3mm only on DPW-250)

Superior Jaw Support
Each jaw is supported by 2 shafts that extend the entire length of the body and are guided by 2 oil impregnated bronze bushings per shaft

Quality Components
Hardened precision stainless steel shafting for wear resistance and long life

High Temperature
Optional Viton® seals are available for high temperature applications

Optional Non-Synchronous Operation

Operating Principle

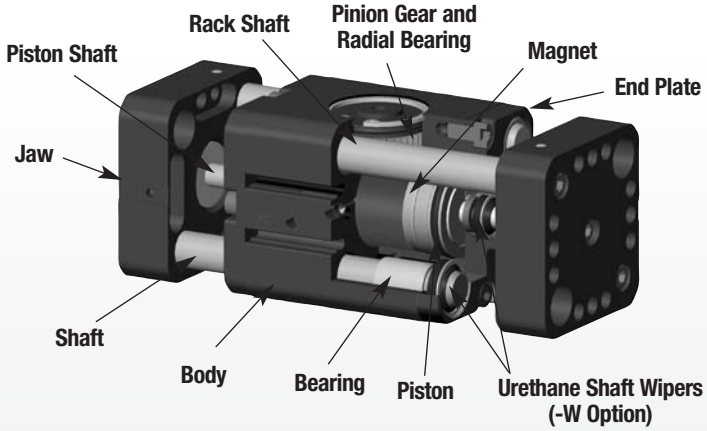

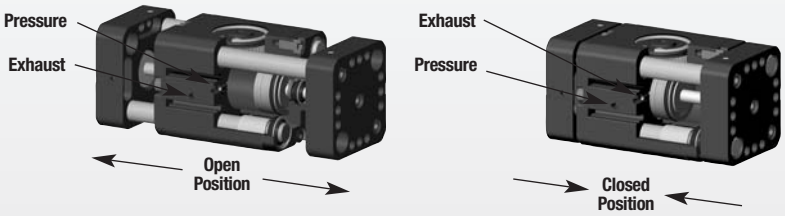

- Two shafts, one with a rack cut into it, are securely fastened to each of the jaws and are supported through the length of the body.
- Two double acting opposed pistons provide power to the jaws.
- The rack shafts of each jaw slide in opposite directions of one another and are synchronized by a piston gear.
- This gripper is suitable for internal or external gripping and can be mounted in any orientation.

U.S Patent #5,163,729 Designed, manufactured and assembled in the USA

Style -DPW Parallel Gripper

Size -250M-1

	250M-1	
Stroke:	0.75 in.	19.1 mm
Grip Force:	50 lbs.	222 N
Weight:	0.662 lbs.	0.30 Kg

Shown with -W Shaft Wiper Option

See Page 1.152

Style -DPW Parallel Gripper

Size -250M-2

Style:	250M-2	
Stroke:	1.25 in.	31.8 mm
Grip Force:	50 lbs.	222 N
Weight:	0.856 lbs.	0.39 Kg

Shown with -W Shaft Wiper Option

See Page 1.154

Style -DPW Parallel Gripper

Size -375M-1

Style:	375M-1	
Stroke:	1.00 in.	25.4 mm
Grip Force:	100 lbs.	445 N
Weight:	1.80 lbs.	0.81 Kg

Shown with -W Shaft Wiper Option

See Page 1.156

Style -DPW Parallel Gripper

Size -375M-2

Style:	375M-2	
Stroke:	2.00 in.	50.8 mm
Grip Force:	100 lbs.	445 N
Weight:	2.66 lbs.	1.20 Kg

Shown with -W Shaft Wiper Option

See Page 1.158

Style -DPW Parallel Gripper

Size -500M-1

Style:	500M-1	
Stroke:	1.50 in.	38.1 mm
Grip Force:	180 lbs.	800 N
Weight:	3.27 lbs.	1.48 Kg

Shown with -W Shaft Wiper Option

See Page 1.160

Style -DPW Parallel Gripper

Size -500M-2

Style:	500M-2	
Stroke:	2.50 in.	63.5 mm
Grip Force:	180 lbs.	800 N
Weight:	4.39 lbs.	2.0 Kg

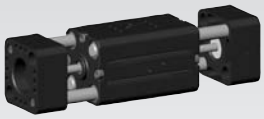

Shown with -W Shaft Wiper Option

See Page 1.162

Parallel Grippers - Wide Body Series

- **Machining applications:** Sealed design repels chips and other particulate from the internal drive mechanism.
- **Long gripper fingers:** Jaw support thru the length of the body allows for long fingers to be attached to the jaws.
- **Large or wide parts:** Wide body design provides secure gripping of large & wide parts.
- **Non synchronous motion:** The unit can be made non-synchronous providing independent jaw motion allowing the gripper to pick or place at a point other than it's center.

Mounting Information:

Grippers can be mounted & operated in any orientation

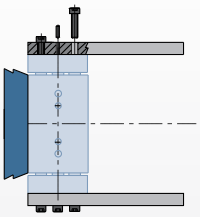

Fingers attach with screws and locate on jaws with dowel pins

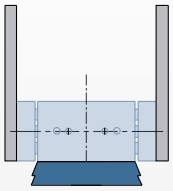

Jaw design allows for simplified mounting of fingers

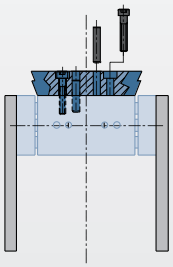

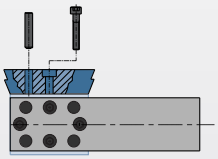

Body mounts on top or on side with screws and locates with slip fit dowel pin holes for accuracy

Technical Specifications:

Pneumatic Specifications	**Imperial**	**Metric**
Pressure Operating Range	**40-100 psi**	**3-7 bar**
Cylinder Type	**Dual Double Acting**	
Dynamic Seals	**Internally Lubricated Buna-N**	
Valve Required	**4-way, 2-position**	
Air Quality Requirements		
Air Filtration	**40 Micron or Better**	
Air Lubrication	**Not Necessary***	
Air Humidity	**Low Moisture Content (dry)**	
Temperature Operating Range		
Buna-N Seals (standard)	**-30°~180° F**	**-35°~80° C**
Viton® Seals (optional)	**-20°~300° F**	**-30°~150° C**
Maintenance Specifications†		
Expected Life		
Normal Application	**5 million cycles**	
w/ Preventative Maintenance	**10+ million cycles***	
Field Repairable	**Yes**	
Seal Repair Kits Available	**Yes**	

*Addition of lubrication will greatly increase service life
†See Maintenance Section

Product Features

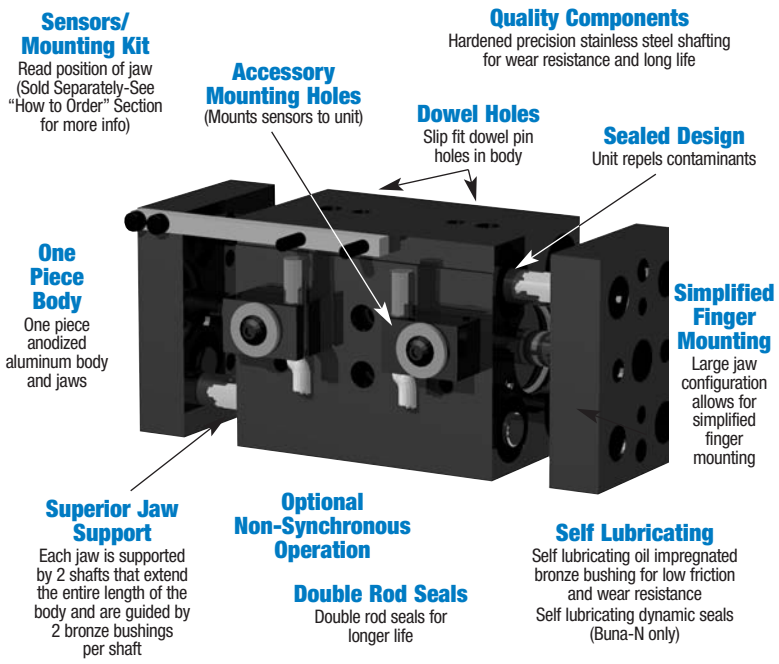

Operating Principle

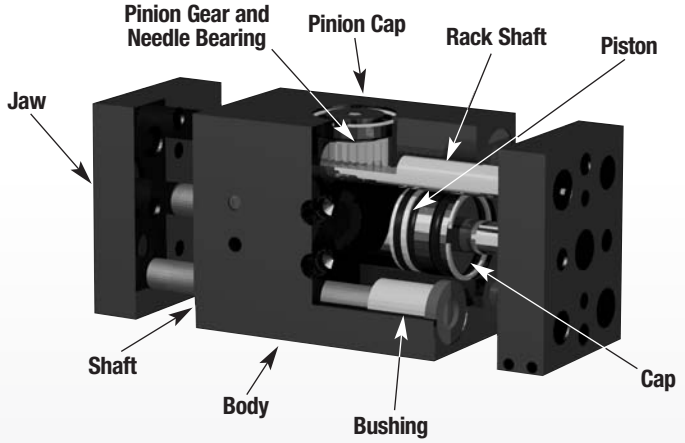

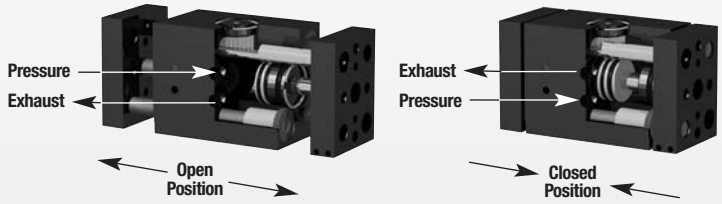

- Two shafts, one with a rack cut into it, are securely fastened to each of the jaws and are supported through the length of the body.
- Two double acting opposed pistons provide power to the jaws.
- The rack shafts of each jaw slide in opposite directions of one another and are synchronized by a pinion gear.
- This gripper is suitable for internal or external gripping.

U.S. Patent # 5,163,729
Designed and manufactured in the USA

Style -RPW Parallel Gripper

Size -625M-1

	625-1	625M-1
Stroke:	2.00 in.	50.8 mm
Grip Force:	240 lb	1068 N
Weight:	6.5 lb	2.95 Kg

See Page 1.170

Style -RPW Parallel Gripper

Size -625M-2

	625-2	625M-2
Stroke:	3.50 in.	88.9 mm
Grip Force:	240 lb	1068 N
Weight:	7.8 lb	3.55 Kg

See Page 1.171

Style -RPW Parallel Gripper

Size -750M

	750	750M
Stroke:	4.50 in.	114.3 mm
Grip Force:	470 lb	2091 N
Weight:	14 lb	6.36 Kg

See Page 1.172

Note: Please refer to the New DPW series for sizes of RPW-250 through RPW-500-2 on pages 1.152 to 1.162. The RPW series information on these sizes is still available on our website and are available for sale. We encourage you to consider the new DPW design for new projects.

Custom Wheel Handling Gripper Series

- **Large, heavy or wide parts:** Wide body & long stroke design provide secure gripping of large heavy parts.
- **Machining & foundry applications:** Rod wipers repel chips and other particulate.
- **Gripper Interchangeability:** Bolt in replacement for PHD's GRR series gripper
- **Multiple Sensing Options:** Choose between inductive proximity sensors or a linear encoder.
- **Maximum rigidity:** Jaws are supported by 3 shafts, shafts are supported at 3 points.
- **Long Finger Applications:** Rigid design and full body support of jaws allows for longer finger lengths.
- **Non-synchronous motion:** The unit can be made non-synchronous providing independent jaw motion allowing the gripper to pick and place at a point other than it's center.

Mounting Information:

Grippers can be mounted & operated in any orientation

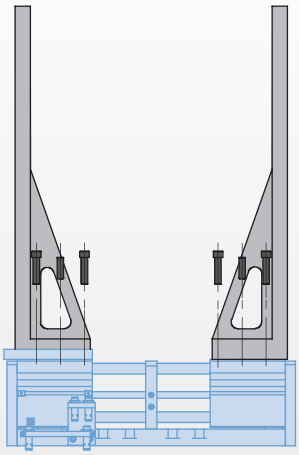

Fingers mount on the bottom of the jaws with screws and dowel pins.

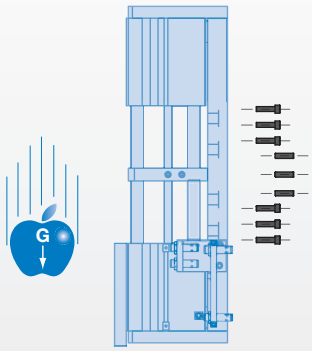

Body mounts with screws from behind and slip fit dowel pin holes for accuracy.

Technical Specifications:

Pneumatic Specifications	**Imperial**	**Metric**
Pressure Operating Range	**40-100 psi**	**3-7 bar**
Cylinder Type	**Double Acting**	
Dynamic Seals	**Internally Lubricated Buna-N**	
Valve Required to Operate	**4-way, 2-position**	
Air Quality Requirements		
Air Filtration	**40 Micron or Better**	
Air Lubrication	**Not Necessary***	
Air Humidity	**Low Moisture Content (dry)**	
Temperature Operating Range		
Buna-N Seals (standard)	**-30°~180° F**	**-35°~80° C**
Viton® Seals (optional)	**-20°~300° F**	**-30°~150° C**
Maintenance Specifications		
Expected Life		
Normal Application	**5 million cycles**	
w/ Preventative Maintenance	**10+ million cycles***	
Field Repairable	**Yes**	
Seal Repair Kits Available	**Yes**	

*Addition of lubrication will greatly increase service life

"B-Series" Industrial Parallel

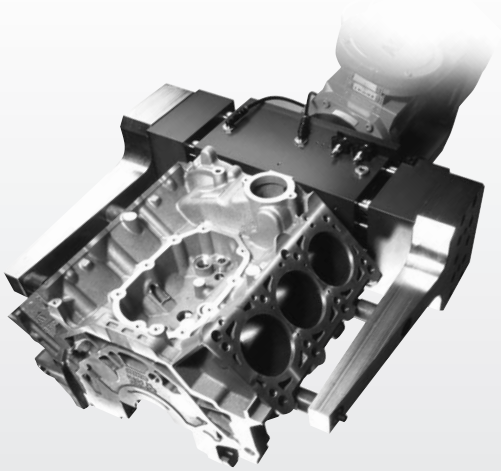

BPW - WIDE BODY SERIES

The BPW Parallel Gripper feature a wide body design ideal for handling large and wide parts using long fingers. The jaws are supported through the full length of the body for high moment carrying capacity and are sealed against chips or particles, which makes it ideal for use in machining or foundry applications.

- **For Large and Wide Parts**
- **High Grip Forces and Moment Loads**
- **Support for Long Fingers**
- **Non-synchronous Option**
- **Optional Spring Close** (BPW-1600 only)

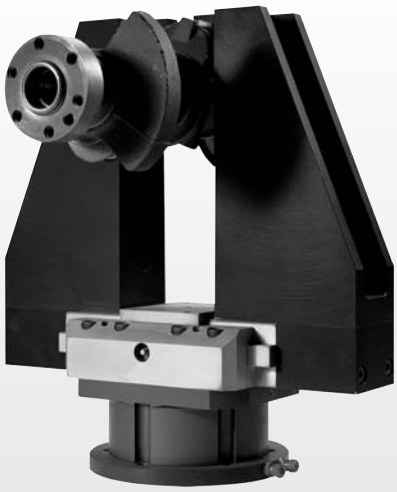

BRP - HEAVY DUTY SERIES

The BRP Parallel Gripper are heavy duty and rugged for reliable operation in real life industrial operations. Sealed jaws protect the internal mechanism from chips and coolant in machining applications. Hardened tool steel jaws and supports allow for long tooling fingers and high moments and forces.

- **Rugged Design**
- **High Grip Forces and Moment Loads**
- **Support for Long Fingers**
- **Optional Spring Open or Close**

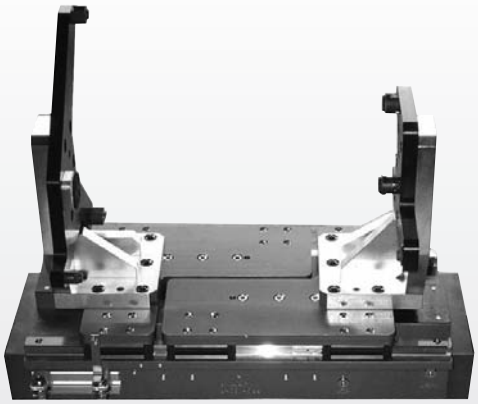

BPG - LONG STROKE SERIES

The BPG Parallel Gripper feature a long stroke and low profile and they are often used to handle different size parts with the same fingers. The jaws and supports are made of hardened tool steel and the body is made of lightweight, hard anodized aluminum.

- **Accommodate Multiple Part Sizes with same Fingers**
- **Long Strokes**
- **Optional Spring Open or Close**
- **Low Profile Design**

Grippers

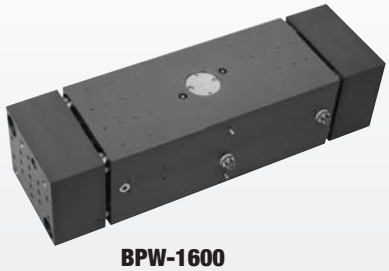

BPW-1600

BPW-2000

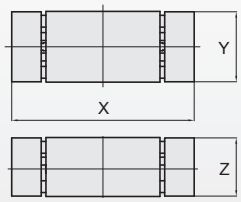

Model #	Stroke	Grip Force	Weight	X	Y	Z
BPW-1600	6.3 in [160 mm]	970 lbs [3868 N]	88 lbs [40 kg]	17.9 in [454 mm]	7.1 in [180 mm]	5.9 in [150 mm]
BPW-2000	7.8 in [200 mm]	1920 lbs [8536 N]	154 lbs [70 kg]	27 in [694 mm]	8.0 in [203 mm]	6.9 in [174 mm]

BRP-20

BRP-21

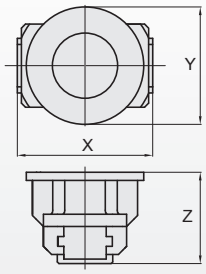

Model #	Stroke	Grip Force	Weight	X	Y	Z
BRP-20	1.5 in [38 mm]	1618 lbs [7200 N]	40.3 lbs [18.3 kg]	8.19 in [208 mm]	7.87 in [200 mm]	6.16 in [157 mm]
BRP-21	1.5 in [38 mm]	3462 lbs [15400 N]	81.6 lbs [37 kg]	12.13 in [308 mm]	10.63 in [270 mm]	6.69 in [170 mm]
BRP-21-D	2.5 in [64 mm]	2001 lbs [8900 N]	81.6 lbs [37 kg]	12.13 in [308 mm]	10.63 in [270 mm]	6.69 in [170 mm]

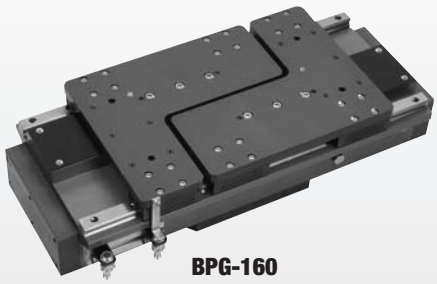

BPG-160

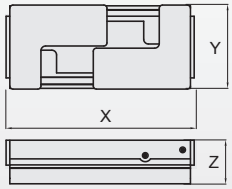

For Applications Support or More Info

Contact Us at:

cs-automation@destaco.com

or Call Us at:

1.888.DESTACO

Model #	Stroke	Grip Force	Weight	X	Y	Z
BPG-160	4.06 in [160 mm]	1787lbs [7950 N]	126 lbs [57 kg]	23.78 in [604 mm]	10.63 in [270 mm]	5.51 in [140 mm]

Parallel Grippers - 3-Jaw Centering Series

- **Machining applications:** The 3 concentric jaws and excellent repeatability make it easier to accurately load and unload round parts.
- **Harsh environments:** Shielded design repels chips and other particulate from internal drive mechanism. Viton® seals are standard.
- **Compact, robust and powerful gripper** This gripper is designed for use in confined spaces, combining long strokes with a high grip force. Optional safety springs retain the components, should the air supply fail or to increase grip force.
- **Different strokes:** All gripper sizes are available in 2 stroke sizes.
- **For long fingers applications:** The large surface area of the jaws coupled with the encapsulated bottom case design allows for long finger designs.
- **Multipurpose gripper:** A wide range of options & accessories (extended stroke, safety springs for internal or external gripping, magneto resistive or inductive sensors, stripper plate) allow these grippers to be used in a wide number of applications.

Mounting Information:

Grippers can be mounted & operated in any orientation

Gripper is located using two dowel pins and assembled from the top with 3 screws.

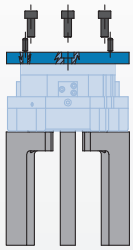

The gripper can also be assembled from the bottom with 3 through body screws.

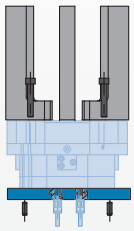

Gripper is protected from debris when operated upside down.

Gripper can be operated utilizing top manifold air ports.

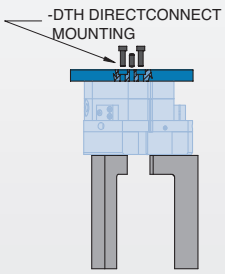

Body mounts with 4 screws and locates with 2 slip fit dowel pins for accuracy

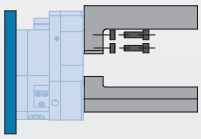

Fingers are located on jaws with 2 dowel sleeves (provided) and assembled with 2 screws.

Technical Specifications:

Pneumatic Specifications	**Imperial**	**Metric**
Pressure Operating Range without Springs	**30-100 psi**	**2-7 bar**
Cylinder Type	**Double Acting or Double Acting Spring Assist or Single Acting Spring Return**	
Dynamic Seals	**Internally Lubricated Viton®**	
Valve Required to Operate:		
Double Acting	**4-way, 2-position**	
Single Acting (**-C** or **-O** Option)	**3-way, 2-position**	
Air Quality Requirements		
Air Filtration	**40 Micron or Better**	
Air Lubrication	**Not Necessary***	
Air Humidity	**Low Moisture Content (dry)**	
Temperature Operating Range		
Viton® Seals (Standard)	**-20°~300° F**	**-30°~150° C**
Maintenance Specifications†		
Expected Life		
Normal Application	**5 million cycles**	
w/ Preventative Maintenance	**10+ million cycles***	
Field Repairable	**Yes**	
Seal Repair Kits Available	**Yes**	

*Addition of lubrication will greatly increase service life
†See Maintenance Section

DIRECTCONNECT™

Product Features

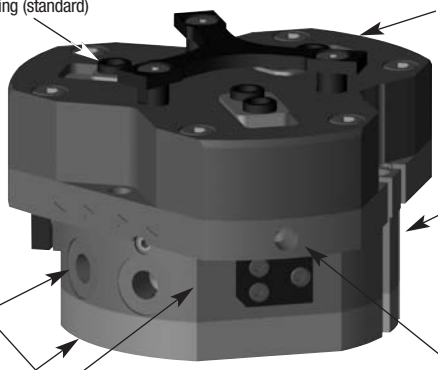

Viton® Seals
Viton® seals for high temperatures (-20°F to +300°F) are standard

Finger Locating Sleeves
For precise finger mounting (standard)

Jaw Components
Hardened and precision ground steel for minimum jaw play with hard plating for wear resistance and long life

Multiple Air Ports
Side or top air ports (top ports require O-ring)

Optional Spring Assist
Optional spring assist retains the component should the air supply fail, to assist the gripper for internal (**-O**) or external (**-C**) gripping, or in single acting or spring assist mode

Standard and Extended Stroke (-L)
Each model of gripper is available in two stroke lengths

DIRECTCONNECT Mounting Patterns
DIRECTCONNECT™ tapped & dowel mounting surface available on **DTH** version [except **-6M, 7M, 8M**]

Multiple Mounting Locations
Gripper can be mounted from the top or bottom

Shielded Design
Gripper body is shielded to repel chips and other particulate from internal drive mechanism

Multiple Sensing Capabilities
Up to 3 magneto resistive sensors (magnets built-in) or inductive sensors available [except **-1**]

Standard Purge/ Scavenge Port
Used with a vacuum for clean room environments or positive pressure for harsh environments

Operating Principle

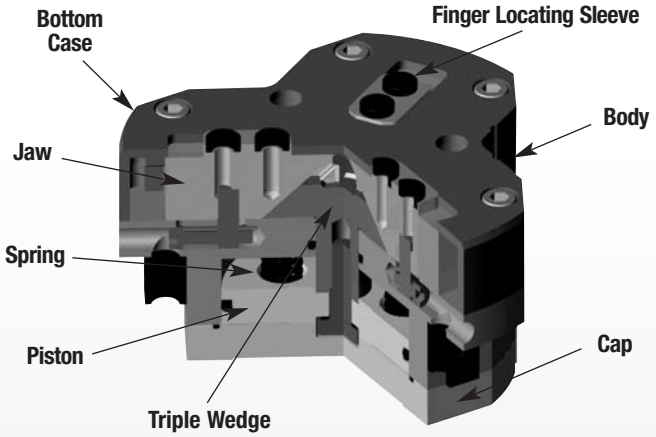

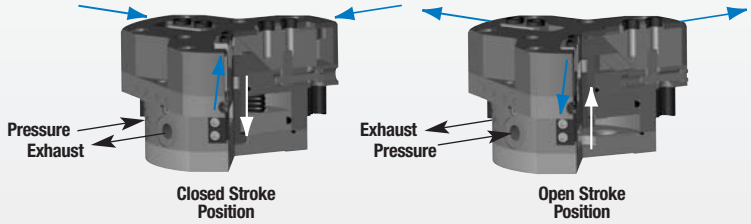

- A double acting piston is connected to a triple sided wedge.
- The triple wedge slides in a slot in each of the jaws converting the vertical motion of the wedge into a horizontal motion of the jaws.
- Each jaw moves within the slots. The design of the bottom case increases the rigidity and permits longer fingers. The large surface area of the guiding system permits higher moment loads.
- This gripper is suitable for internal or external gripping using single or double acting mode.

Style -RTH/DTH Parallel Gripper

Size -1M

	RTH/DTH-1M		RTH/DTH-1M-L	
Total Stroke:	0.16 in.	4 mm	0.32 in.	8 mm
Grip Force:	200 lbs	889 N	130 lbs	579 N
Weight:	0.6 lbs	0.25 Kg	0.6 lbs	0.25 Kg

See Page 1.184

Style -RTH/DTH Parallel Gripper

Size -2M

	RTH/DTH-2M		RTH/DTH-2M-L	
Total Stroke:	0.24 in.	6 mm	0.47 in.	12 mm
Grip Force:	335 lbs	1490 N	220 lbs	979 N
Weight:	1.2 lbs	0.53 Kg	1.2 lbs	0.53 Kg

See Page 1.186

Style -RTH/DTH Parallel Gripper

Size -3M

	RTH/DTH-3M		RTH/DTH-3M-L	
Total Stroke:	0.31 in.	8 mm	0.63 in.	16 mm
Grip Force:	591 lbs	2627 N	384 lbs	1708 N
Weight:	2.4 lbs	1.08 Kg	2.4 lbs	1.08 Kg

See Page 1.188

Style -RTH/DTH Parallel Gripper

Size -4M

	RTH/DTH-4M		RTH/DTH-4M-L	
Total Stroke:	0.39 in.	10 mm	0.79 in.	20 mm
Grip Force:	1026 lbs	4562 N	667 lbs	667 N
Weight:	4.3 lbs	1.95 Kg	4.3 lbs	1.95 Kg

See Page 1.190

Style -RTH/DTH Parallel Gripper

Size -5M

	RTH/DTH-5M		RTH/DTH-5M-L	
Total Stroke:	0.51 in.	13 mm	1.02 in.	26 mm
Grip Force:	1771 lbs	7877 N	1152 lbs	5124 N
Weight:	8.6 lbs	3.9 Kg	8.6 lbs	3.9 Kg

See Page 1.192

Style -RTH Parallel Gripper

Size -6M

	RTH-6M		RTH-6M-L	
Total Stroke:	0.63 in.	16 mm	1.26 in.	32 mm
Grip Force:	3099 lbs	13786 N	2017 lbs	8971 N
Weight:	17.4 lbs	7.9 Kg	17.4 lbs	7.9 Kg

See Page 1.194

Style -RTH Parallel Gripper

Size -7M

	RTH-7M		RTH-M-L	
Total Stroke:	0.98 in.	25 mm	1.97 in.	50 mm
Grip Force:	4967 lbs	22093 N	3222 lbs	14322 N
Weight:	34.6 lbs	15.7 Kg	34.6 lbs	15.7 Kg

See Page 1.196

Style -RTH Parallel Gripper

Size -8M

	RTH-8M		RTH-8M-L	
Total Stroke:	1.38 in.	35 mm	2.76 in.	70 mm
Grip Force:	9971 lbs	44354 N	6450 lbs	28690 N
Weight:	96.8 lbs	43.9 Kg	96.8 lbs	43.9 Kg

See Page 1.198

Through Hole Parallel Gripper PPC Series

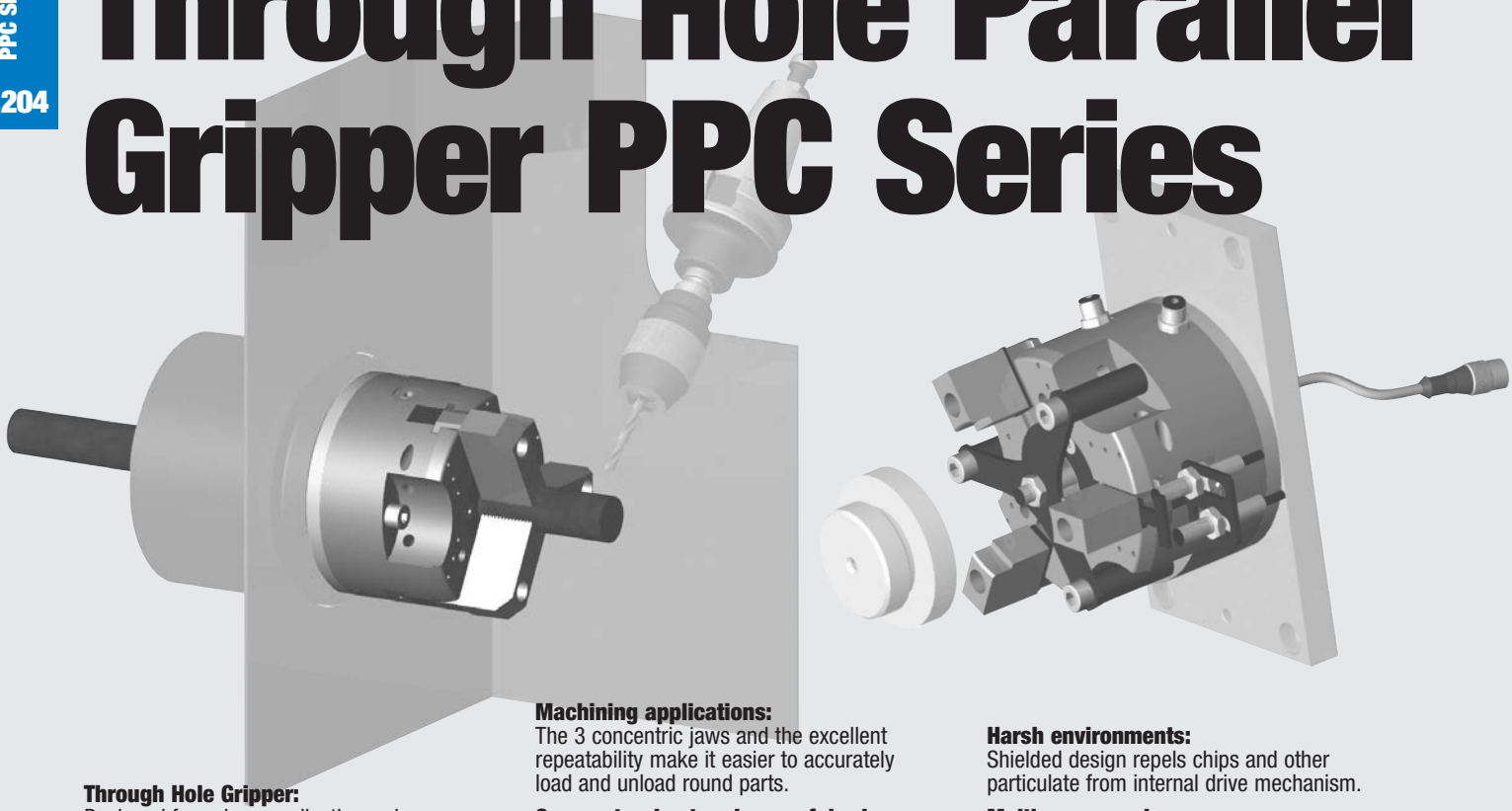

Through Hole Gripper:
Designed for unique applications where a component ejector is needed after un-gripping the part or to blow air for cleaning the part center. The through hole design allows for the mounting of sensors to detect part presence, and for feeding parts to machining centers.

Machining applications:
The 3 concentric jaws and the excellent repeatability make it easier to accurately load and unload round parts.

Compact, robust and powerful gripper:
This gripper is designed for use in confined spaces, combining long strokes with a high grip force. Optional safety springs retain the components, should the air supply fail or to increase grip force.

Harsh environments:
Shielded design repels chips and other particulate from internal drive mechanism.

Multipurpose gripper:
A wide range of options and accessories (extended stroke, safety springs for internal or external gripping, inductive sensors, Viton® seals) allow these grippers to be used in a number of applications.

Mounting Information:

Grippers can be mounted and operated in any direction

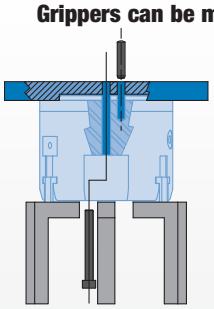

Gripper is located using pilot boss and a dowel pin and assembled with 3 through body screws

The gripper is protected from falling debris when it is mounted and operated upside down

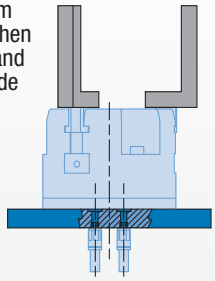

Gripper can be operated utilizing top manifold air ports

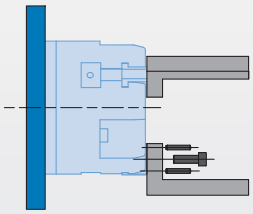

Fingers are located on jaws with 2 dowel pins and assembled with 1 screw

Technical Specifications:

Pneumatic Specifications	Imperial	Metric
Pressure Operating Range without springs	30-100 psi	2-7 bar
Pressure Operating Range with springs	45-100 psi	3-7 bar
Cylinder Type	Double Acting *or* Double Acting Spring Assist *or* Single Acting Spring Return	
Dynamic Seals	Internally Lubricated Buna-N	
Valve Required to Operate		
Double Acting	4-way, 2-position	
Single Acting	3-way, 2-position	
Air Quality Requirements		
Air Filtration	40 Micron or Better	
Air Lubrication	Not Necessary*	
Air Humidity	Low Moisture Content (dry)	
Temperature Operating Range		
Buna-N Seals (standard)	-30°~180° F	-35°~80° C
Viton® Seals (optional)	-20°~300° F	-30°~150° C
Maintenance Specifications†		
Expected Life		
Normal Application	5 million cycles	
w/ Preventative Maintenance	10+ million cycles*	
Field Repairable	Yes	
Seal Repair Kits Available	Yes	

*Addition of lubrication will greatly increase service life
† See Maintenance Section

Product Features

Viton® Seals
Optional for high temperature applications

Quality Components
Made from Aluminum alloy, hard coat anodized with Teflon® Impregnation.The gripper's main components are made of heat treated steel

Standard Stroke and Extended Stroke
Each model of gripper is available in 2 stroke lengths

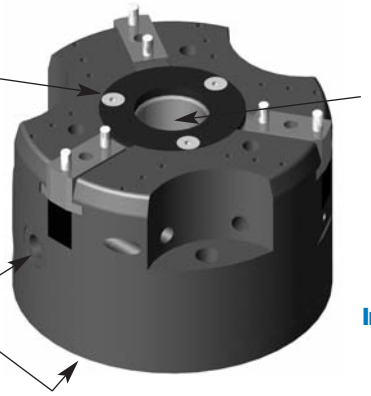

Shield and Covers
Gripper body is shielded to repel chips and other particulate from internal drive mechanism

Through Hole Design
The standard hole diameter can be customized with optional sleeves

Multiple Ports
Side or top manifold ports

Inductive Sensing
Inductive sensor kits available. Capable of sensing 4 positions

Safety Springs
Optional Springs for internal gripping (-**RI**) or external gripping (-**RE**) in single acting mode or spring assist

Operating Principle

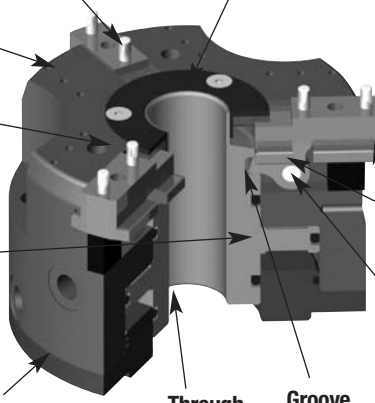

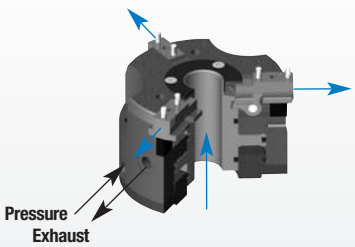

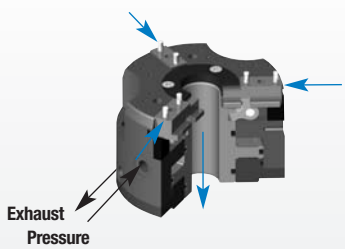

- A double acting piston with a through hole drives the three cams.
- The piston's motion makes the cam lever rotate and moves the jaws.
- The three cams synchronize the jaw motion.
- Optional springs can be used to increase the grip force or to hold part in the event of loss of air.
- This gripper is suitable for internal or external gripping.

Style-PPC-12 & PPC-12-C

Style:	**PPC-12**	
Total Stroke:	0.394 in.	10 mm
Grip Force:	331 lb	1474 N
Weight:	2.2 lb	1.00 Kg
Style:	**PPC-12-C**	
Total Stroke:	0.630 in.	16 mm
Grip Force:	201 lb	896 N
Weight:	2.4 lb	1.10 Kg

See Page **1.206-1.207**

Style-PPC-25 & PPC-25-C

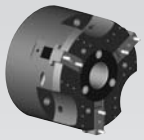

Style:	**PPC-25**	
Total Stroke:	0.512 in.	13 mm
Grip Force:	589 lb	2620 N
Weight:	4.9 lb	2.20 Kg
Style:	**PPC-25-C**	
Total Stroke:	0.787 in.	20 mm
Grip Force:	369 lb	1642 N
Weight:	5.1 lb	2.30 Kg

See Page **1.208-1.209**

Style-PPC-34 & PPC-34-C

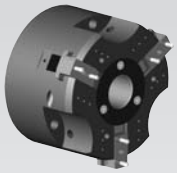

Style:	**PPC-34**	
Total Stroke:	0.787 in.	20 mm
Grip Force:	974 lb	4332 N
Weight:	11.2 lb	5.10 Kg
Style:	**PPC-34-C**	
Total Stroke:	1.181 in.	30 mm
Grip Force:	638 lb	2838 N
Weight:	11.7 lb	5.3 Kg

See Page **1.210-1.211**